HNR

MECHANICAL CALCULATION COVER SHEET

Calculation No:3442.053.MCAL.001,
Calculation Title: CHILLED WATER SYSTEM CALCULATIONS (with sections one – five) – SEE INDEX
Project ID # 100256
Project Title: CCN CHILLED WATER SYSTEM OPTIMIZATION MASTER PLAN

ORIGINAL AND REVISED CALCULATION/ANALYSIS APPROVAL

	Rev._A Name/Signature/Date	Rev. B Name/Signature/Date	Rev._0 Name/Signature/Date
Originator: DAVID WALKER	10/16/01		09/04/02
Checked By: MIKE SLAMAN	10/16/01		09/04/02
Approved By: MIKE SLAMAN	10/16/01		09/04/02
Other:			

AFFECTED DOCUMENTS

Document Number	Document Title	Rev. Number
3442.053.ECAL.001	Short Circuit Analysis of SUS-H & MCC-1	0
3442.053.MCAL.001 through .006	CCF/LDCC COOLING PLANT MODIFICATIONS sheets G-0001, M0001 through M-8006, and E-0001 through E-7007	0
3442.053.MCAL.001 through .006.	LDCC EC-1 MODIFICATIONS sheets G-0001, M-0001 through M-8006, and E-0001 through E-7007.	0

Record of Revision

Rev.	Reason for Revision
REV A	FIRST SUBMITTAL OF CALCULATIONS
REV 0	ISSUED FOR CONSTRUCTION. NO TECHNICAL CHANGES FROM REV A. CHANGES TO THE AFFECTED DOCUMENTS ONLY, AS NOTED ABOVE.

Holmes & Narver | Raytheon

CALCULATION CHECKLIST

page ii of iii

Task/Project #: 100256
Task Order 053
CCN CHILLED WATER SYSTEM OPTIMIZATION MASTER PLAN

Calculation Number: 3442.053.MCAL.001 | Revision ~~A~~ 0

Reviewer/Checker : MIKE SLAMAN

Reviewer performed or supervised subject calculation.
✓ NO ____ YES Justification Attachment _____, _____ pages

Alternate Verification method approved _____ Method _____

Date 10/16/01

ITEM(S) CHECKED	Accept Y/N	OBJECTIVE EVIDENCE Sheets		INITIAL/ DATE 10/16/01
1. Cover forms properly completed.	Y			
2. Calculation Sheet headers complete with calc. no., rev., etc.	Y			
3. Calculation Sheet contents complete per format.	Y			
4. Listed attachments included.	N/A			
5. Calculation Objective clearly described.	Y			
6. Criteria are suitable and properly referenced to task-specific documents.	Y			
7. Assumptions and data described and attached or referenced to task documents.	Y 7			
8. Calculation method identified and appropriate for the design activity.	Y 8			
9. Calculation results reasonable and correctly described in Results and Conclusions.	Y 9			
10. Computer Program identified with version and revision.	Y 10			
11. Computer Program references method used, etc.	N/A 11			
12. Computer input/output provided.	Y 12			
13. Computer run traceable to calculation.	Y 13			
14. Computer input data within permissible design input range.	Y 14			
15. Computer Program validation/verification addressed.	N 15			

REMARKS

Mike Slaman
Checker Print Name & Sign
MIKE SLAMAN

Date 10/16/01

David F. Walker
Preparer Print Name & Sign
DAVID WALKER

Date 10/16/01

HNR Holmes & Narver | Raytheon **MECHANICAL DESIGN CALCULATION SHEET**	Project Title: CCN CHILLED WATER SYSTEM OPTIMIZATION MASTER PLAN Project ID #100256 Page iii of iii
Calculation No. 3442.053.MCAL.001 **Rev. No.** A0	PERFORMED BY: David F. Walker 10/16/01 DATE DAVID WALKER
Calculation Title: CHILLED WATER SYSTEM CALCULATIONS	CHECKED BY: Mike Slaman 10/16/01 DATE MIKE SLAMAN

INTRODUCTION

Purpose: The "Statement of Work" provided from LANL dated 7/24/01 states " Provide feasibility and Title II services to connect the CCF chilled water plant to the LDCC plant such that CCF chillers will be shut down and removed and the LDCC plant will be supplying chilled water to the CCF and outlying buildings." This work requires several objectives. The first five objectives re defined in the scope listed below.

Scope:

1. Verify that the LDCC chiller plant can adequately support the cooling loads of both LDCC and CCF plants.
2. Develop a plan to modify the LDCC equipment room cooling system from an evaporative based system to a chilled water based system.
3. Add a larger chilled water expansion tank to the combined chilled water systems.
4. Modify chilled water pump impellers to match the combined chilled water pumping loads. Add backdraft dampers to air handling unit EC-1 supply fans.
5. Evaluate the LDCC 900 Ton chiller condenser water pump and replace it if necessary.

DESIGN BASIS

Design Inputs:

1. Test and Balance data performed by the Kirk Air Co. on 7/17/01 for CCF and Ambient Air Balance Co. for LDCC on 02/02/90.
2. LDCC equipment room 189 cooling load calculations for LDCC Chiller Replacement Project I.D. 100015.
3. Results from the pipe model program "Pipe Flo" created by Engineered Software INC. See Calculaltion M003.
4. Manufacturers'equipment and installation requirements.

Criteria: Maintain LDCC equipment room at 70 to72^{0}F.

Limit plant shut downs- both LDCC and CCF plant

Assumptions: Future cooling loads identified under the "LDCC Chiller Replacement" project I.D. 100015 will not be realized.

Condensate piping that will be converted to chilled water piping can be properly cleaned and that the pressure drop through the piping will be minimal.

REFERENCES: Test and Balance data, and "LDCC Chiller Replacement" calculations referenced above. Also manufacturer data was used to match equipment parts to existing equipment.

METHODS: By using equipment name plate data listed in the Test and Balance report, chilled water system temperature and pressure readings, etc., the current cooling load was determined and compared with the chiller plant equipment capacities to determine if adequate. Pump data obtained from the T&B reports were used to determine pump impeller sizes necessary to meet the pump flow rates. Field measurements were used to determine chilled water coil installation requirements. Coil was sized using manufacturer computer software.

RESULTS AND CONCLUSIONS: LDCC chiller plant does have adequate capacity to serve both LDCC and CCF cooling loads. The evaporative media in air handler EC-1 can be replaced with a 4-row cooling coil and casing. The cooling coil will have to be knocked down and rebuilt inside the fan housing because it won't fit otherwise. Chilled water pump impellers can be increased in size by replacing the entire rotating elements of the pumps. The air handling unit EC-1 fans do not have anyway currently to keep air from reversing itself through the standby fans. Adding backdraft dampers to each of the four fans will not work because of space constraints in the air handling unit. Therefore the fan inlet cones will be replaced with new inlet cones that have built-in inlet vanes for damper control.

Holmes & Narver | Raytheon **MECHANICAL DESIGN CALCULATION SHEET**	Project Title: CCN CHILLED WATER SYSTEM OPTIMIZATION MASTER PLAN Project ID #100256

Calculation No. 3442.053.MCAL.001	PERFORMED BY: 10/16/01 DATE DAVID WALKER
Rev. No. A 0 9/4/02	CHECKED BY 10/16/01 DATE MIKE SLAMAN
Calculation Title: CHILLED WATER SYSTEM CALCULATIONS (5 SECTIONS)	

SECTION ONE:
CCF AND LDCC LOAD CALCULATIONS

PAGES: 2

BRIDGERS & PAXTON
CONSULTING ENGINEERS, INC.

JOB CCN Chilled Water Sys. opt. Pl. SHEET 1 OF 2
CALCULATED BY DSW DATE 8/16/01
CHECKED BY [illegible] DATE 10/16/01
SCALE JOB #

3442.053.MCAL.001,Rev A
CHILLED WATER CALC
SECTION ONE

CCF & LDCC LOAD CALC

I. CCF Chiller Plant Existing Loads

a. Chiller CWR-173 - as measured by T+B 4/16/01

$(1400\text{ gpm} \times (50°F - 45°F) \times 500)/1000 = \underline{3500\text{ MBH}}$

b. Chiller CWR-175 - as measured by T+B 4/16/01

$(1200\text{ gpm} \times (49°F - 45°F) \times 500)/1000 = \underline{2400\text{ MBH}}$

Subtotal: = 5900 MBH

II. New CCF Loads

a. 30 Teraopts Phase I Installs (SM-132) Rm 270

8 CRU's x 386.9 MBH ea. = 3095.2 MBH

b. Bldg. 207 Study Center CRU's Addition

4 CRU's x 134.8 MBH = 539.2 MBH

Subtotal: = 3634.4 MBH

Total Cooling Load @ CCF Plant = 9534.4 MBH or 794.5 tons

BRIDGERS & PAXTON
CONSULTING ENGINEERS, INC.

JOB CCN Chilled Water opt. PL. SHEET 2 OF 2
CALCULATED BY [illegible] DATE
CHECKED BY [illegible] DATE 10/16/01
SCALE JOB #

3442.053.MCAL.001,Rev A
CHILLED WATER CALC CCF & LDCC LOAD CALC
SECTION ONE

III. LDCC Existing Loads

a. From measurements taken during a study 2/9/99. One 700 ton chiller and one chilled water pump in operation.

$$Q = (1870\ gpm \times (53^\circ F - 46^\circ F) \times 500) / 1000 = \underline{\underline{6545\ MBH}}$$

IV. New Loads at LDCC chiller plant

a. Addition of chilled water coil to EC-1 serving Mech. room 189. (From previous room calculation – No future loads accounted for) 750 MBH

Total LDCC cooling load

$\boxed{7295\ MBH \text{ or } 608\ Tons}$

Holmes & Narver | Raytheon **MECHANICAL DESIGN CALCULATION SHEET**	Project Title: CCN CHILLED WATER SYSTEM OPTIMIZATION MASTER PLAN Project ID #100256

Calculation No. 3442.053.MCAL.001	PERFORMED BY: 10/16/01 DATE DAVID WALKER
Rev. No. A.0	CHECKED BY 10/16/01 DATE MIKE SLAMAN
Calculation Title: CHILLED WATER SYSTEM CALCULATIONS (5 SECTIONS)	

SECTION TWO:
LDCC COOLING COIL CALCULATION AND SELECTION

PAGES: 14

BRIDGERS & PAXTON
CONSULTING ENGINEERS, INC.

JOB CCN chilled water opt. PL SHEET 1 OF 14
CALCULATED BY DJW DATE 9/6/01
CHECKED BY [illegible] DATE 10/16/01
SCALE JOB #

3442.053.MCAL.001,Rev A
CHILLED WATER CALC
SECTION TWO

LDCC COOLING COIL
CALC & SELECTION

I. LDCC Cooling Load and EC-1 Chilled Water Coil Selection

A. Current Heat Gain (Sensible), Q_S

$Q_S =$

363,755	BTUh	(Equip., Lighting, & Bldg. Envelope)
42,636	BTUh	(3000 CFM Infiltration – 89°F to 72°F)
284,700	BTUh	(UPS Load)
59,904	BTUh	(Additional OSA Load to maintain 0.5 CFM/Ft² ventilation in Chiller Machinery Room (7215 CFM – 3000 CFM) or 4215 CFM OSA cooled from 89°F to 72°F)

$$\boxed{Q_S = 750{,}995 \text{ BTUh}}$$

B. Latent Load, Q_L

minutes/HR, S.L. Density (Air), S.L/AH air density ratio, Heat of Vaporization, ΔW

$$Q_L = 7215 \text{ CFM} \times 60 \times 0.075 \times .76 \times 1076 \times (.00805 - .00666)$$

$$\boxed{Q_L = 36{,}905 \text{ BTUh}}$$

C. Cooling Load Totals

$$Q_T = Q_S + Q_L$$

$$= 750{,}995 \text{ BTUh} + 36{,}905 \text{ BTUh}$$

$$\boxed{Q_T = 787{,}900 \text{ BTUh or } 65.7 \text{ tons}}$$

Select chilled water coil for this load or greater

II. Supply Air in Mech. Room 189

$$\text{Supply Air} = \frac{Q_s}{1.1 \times .76 \times \Delta T}$$

$$= \frac{750,995 \text{ BTUh}}{1.1 \times .76 \times (72^\circ F - 55^\circ F)} = \boxed{52,842 \text{ CFM}}$$

Air Factor $\frac{\text{BTU-min}}{\text{ft}^3\,^\circ\text{F-hr}}$; Rel. Air density ; Room T − Supply T

III. Exhaust Air

- We need to maintain a minimum of 0.05" neg. static room pressure referenced to adjacent spaces to meet the 1997 Uniform Mechanical Code Ch. 11 for chiller machinery rooms. Based on previous leakage area calcs, the estimated CFM differential is 5000 CFM.

Exhaust = 52,842 CFM + 5000 CFM = $\boxed{57,842 \text{ CFM}}$

IV. Coil Inlet Conditions

Supply air = 52,842 CFM

$$\text{Mixed Air Temp (MAT)} = \frac{(48,627 \text{ CFM RA} \times 72^\circ F) + (4215 \text{ CFM} \times 87^\circ F \text{ OSA})}{52,842 \text{ CFM}}$$

= 73.4°F db From 7500 ft psycrometric chart, wb = 53.1°F

$$\text{Flow Rate} = \frac{787,900 \text{ BTUh}}{500 \times 10^\circ \Delta T} = 158 \text{ gpm}$$

→ However, because we are using a modular coil and casing, we are limited to the coil size based on the casing size.

BRIDGERS & PAXTON
CONSULTING ENGINEERS, INC.

JOB CCN Chilled Water Sys. Opt. PL
CALCULATED BY D.T.W.
CHECKED BY
SCALE

SHEET 3 OF 14
DATE 9/6/01
DATE 10/16/01
JOB #

3442.053.MCAL.001,Rev A
CHILLED WATER CALC
SECTION TWO

LDCC COOLING COIL
CALC & SELECTION

The Flow rate should be based on the rate necessary to keep the Water moving above 4 fps to help prevent Coil Freeze up.

Based on a Trane MCC-100 modular coil Selection at 73.4°F db EAT, 53.1°F wb and 248 gpm Flow rate based on 6.5°F ΔT:

Total capacity = 806 MBH > 788 MBH Calculated
OK ✓

Coil velocity = 4.15 fps > 4.0 fps OK ✓

3442.053.MCAL.001
4/14
Rev 0

TRANE
3411 Girard NE.
Albuquerque NM 87107

FAX COVER SHEET

DATE: 4-15-02
TO: David Walker
B. & P.
PHONE:
FAX: 888-1436
FROM: Don Schedlbauer
PHONE: (505) 884-2044
FAX: (505) 884-2449

Number of pages including cover sheet: 8

RE: L. & C. C. EC-1 Modifications

David —

Attached is the performance selection for the size 100 MCC coil section which utilizes the type "K" chilled water cooling coil and .049" thick red brass tubes. I also e-mailed this submittal to you. Please let me know if the e-mailed document was received and if you prefer this method for sending submittal information.

Sincerely,
Don Schedlbauer

3442.053.MCAL.001

Rev 0 5A of 14

Tag Data - Indoor Central Station Air Handler Units (Qty: 1)

Item	Tag(s)	Qty	Description	Model Number
A1	MCC-100	1	Trane Modular #100 Coil Section	MCCA100

Product Data - Indoor Central Station Air Handler Units

Item: A1 Qty: 1 Tag(s): MCC-100

Modular base unit

Modular climate changer
Unit size 100
19 Inch Unit length
External support kit - ship attached
Listed UL unit

Coil (Pos #1)

Medium horizontal coil module
Full coil height
Insulation Double Wall Solid 1 1/2 lb (25mm 0.510kg)
Galvanized IAQ Drain Pan - Right Hand Connection
Type "K" cleanable chilled water cooling coil
Coil supply right hand
4 row coil
87 Coil fins per foot (fins per meter)
Prima flo E (energy efficient)
Aluminum fins
.049" (1.245mm) red brass tubes
Galvanized steel coil casing

Performance Data - Indoor Central Station Air Handler Units

Tags	MCC-100
Coil	
Position	**#1**
Airflow (cfm)	52842.0
Total Capacity (MBH)	806
Dry coil weight (lb)	2301.3
Top or single coil dry weight (lb)	767.1
Middle or bottom coil dry weight (lb)	767.1
Bottom coil dry weight (lb)	767.1
Entering dry bulb (F)	73.40
Entering wet bulb (F)	53.10
Water temperature rise (F)	6.50
Sensible capacity (MBH)	806
Leaving dry bulb (F)	55.00
Leaving wet bulb (F)	46.16
Entering water temperature (F)	45.00
Leaving water temperature (F)	51.50
Standard fluid flow rate (gpm)	248.06
Water volume (gal)	44.76
Water pressure drop (ft H2O)	15.69
Air pressure drop (in H2O)	0.18
Elevation (ft)	7500.00
Face velocity (ft/min)	545.11
Face area (sq ft)	96.94
Wet coil weight (lb)	2674.6
Fouling factor (hr-sq ft-deg F/Btu)	0.00000
Water velocity (ft/sec)	5.08
Fluid type	Water
Module length (in)	19.000
Module weight (lb)	4024.4

Mechanical Specifications - Indoor Central Station Air Handler Units
Item(s): A1 Qty: 1 Tag(s): MCC-100

6 of 14
LDCC COOLING COIL
CALC & SELECTION

GENERAL
The units must be rigged, lifted, and installed in strict accordance with the Installation, Operation, and Maintenance manual (CLCH-IM-15A). Unit performance is certified in accordance with ARI Standard 430 for Central Station Air Handling Units. Sound power levels are in accordance with AMCA 300-96 and ARI 260P. Joints between wall panels and structural frames are sealed with closed cell gasketing for leak seal, thermal and acoustical break.

Since The Trane Company has a policy of continuous product improvement, it reserves the right to change design and specification without notice.

EXTERNAL SUPPORT KIT
Units ship fully assembled (within freight limitations) on a galvanized steel external support kit/housekeeping pad.

UNIT CONSTRUCTION
Unit is constructed of a complete frame with removable panels. Removal of side panels shall not affect the structural integrity of each module. The casing is able to withstand up to 6" (1.49kPa) positive or 4" (1.00kPa) negative static pressure. All exterior wall panels are made of G90 galvanized steel. Closed-cell foam gasketing is provided where modules are joined.

ACCESS DOOR CONSTRUCTION
Full sized hinged removable double-wall access doors with two step safety handles are provided for quick access to the interior of the unit casing. Exterior wall of door is made of G90 galvanized steel. Interior wall of door is 20-gauge (0.9mm) solid galvanized steel.

COIL MODULE
Coil module is provided complete with coil and coil holding frame. Coil is manufactured by Trane. Fins have collars drawn, belled and firmly bonded to the tubes by means of mechanical expansion of the tubes. Coils are mounted in the unit casing to be accessible for service and can be removed from the unit either through the side or top. Capacities, pressure drops and selection procedures are certified in accordance with ARI Standard 410.

Type "K" Chilled Water Coil
A single-row serpentine coil, with 5/8" (16mm) OD tubes, is enclosed in the coil section. Headers are cast iron and removable from both ends of coil for periodic mechanical tube cleaning. Coil has a supply header to ensure distribution of chilled water to each tube of coil. Coil is proof tested at a minimum of 300 psig (2068kPa) and leak tested to 200 psig (1379kPa), air pressure under water. Working pressure is 200 psig (1379kPa) at 220F (104C).

Water Coil Tubes
Tubes are 5/8" (16 mm) OD .020" (0.508mm) thick copper tubes.

Coil Fin Type
Aluminum plate fin is Trane PRIMA-FLO E (Energy Efficient) fin design.

Coil Supply Connection
Coil supply connection is on right side of module

Insulation
Module is double wall constructed to prevent fiberglass erosion into the air stream and allow cleaning of the unit interior. Interior wall is 22-gauge (0.8 mm) solid galvanized steel. Factory insulation is 1" thick 1 1/2 lb density (25mm, 0.510 kg). Insulation complies with NFPA-90A requirements for flame spread and smoke generation.

Drain Pan
Module has a sloped, insulated double wall galvanized drain pan under coil section(s) for positive drainage of condensate. Drain connection is provided on one side of module.

As-Built - Indoor Central Station Air Handler Units
Item: A1 Qty: 1 Tag(s): MCC-100

LDCC COOLING COIL
CALC & SELECTION

7 of 14

DFW

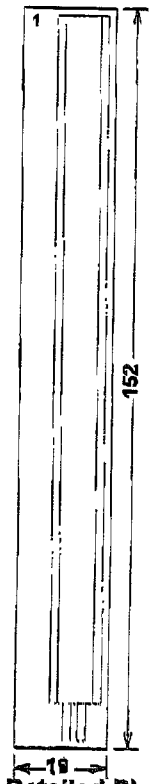

Right Side of Unit

Detailed Plan View: Top - Measurements in inches

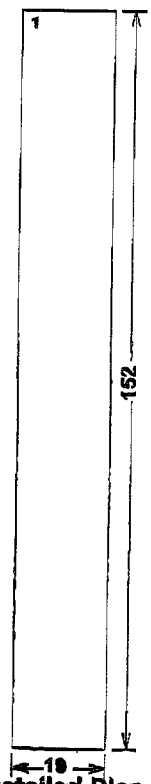

Left Side of Unit

Detailed Plan View: Bottom - Measurements in inches

3442.053.MCA2.001

As-Built - Indoor Central Station Air Handler Units
Item: A1 Qty: 1 Tag(s): MCC-100

Rev 0 8Aq 14

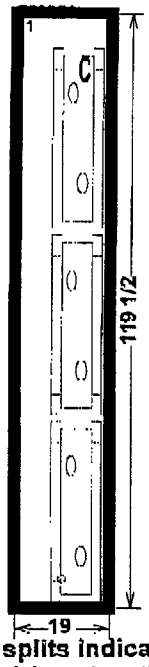

Overall Elevation View: Right - Shipping splits indicated by bold outline. - Measurements in inches

Pos #	Module	Length	Weight
1	Coil	19	4024.44

Installed Unit Weight 4024.44 lbs

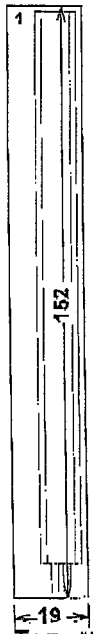

Overall Plan View: Top - Measurements in inches

LDCC COOLING COIL
CALC & SELECTION

9 of 14

DZW

As-Built - Indoor Central Station Air Handler Units
Item: A1 Qty: 1 Tag(s): MCC-100

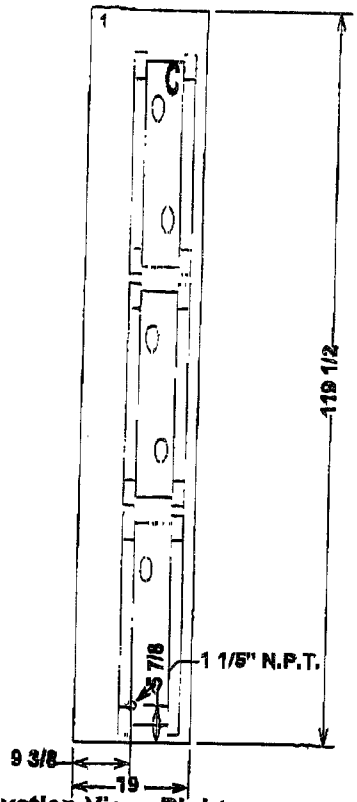

Detailed Elevation View: Right - Measurements in inches

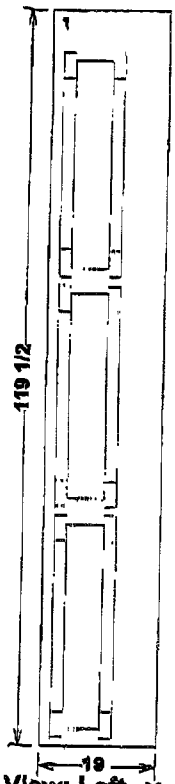

Detailed Elevation View: Left - Measurements in inches

As-Built - Indoor Central Station Air Handler Units
Item: A1 Qty: 1 Tag(s): MCC-100

LDCC COOLING COIL
CALC & SELECTION

10 of 14

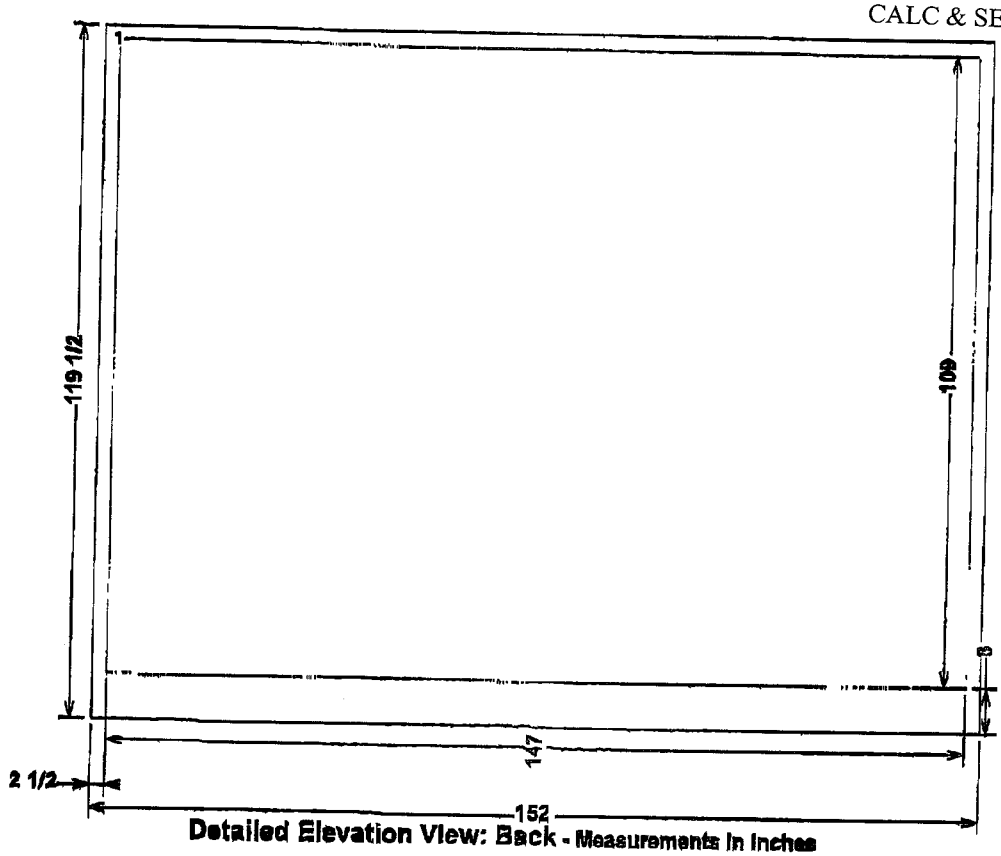

Detailed Elevation View: Back - Measurements in inches

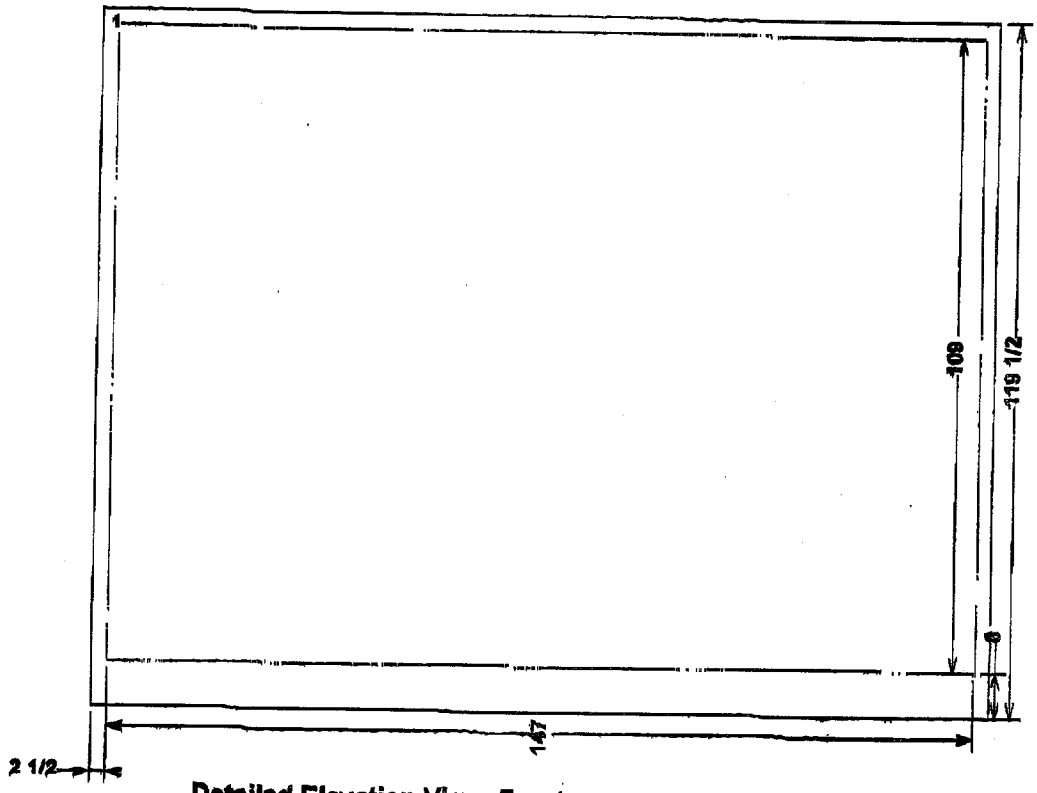

Detailed Elevation View: Front - Measurements in inches

Unit Dimensions - Indoor Central Station Air Handler Units
Item: A1 Qty: 1 Tag(s): MCC-100

3442.053.MCAL.001,Rev A
CHILLED WATER CALC
SECTION TWO

11 of 14

LDCC COOLING COIL
CALC & SELECTION

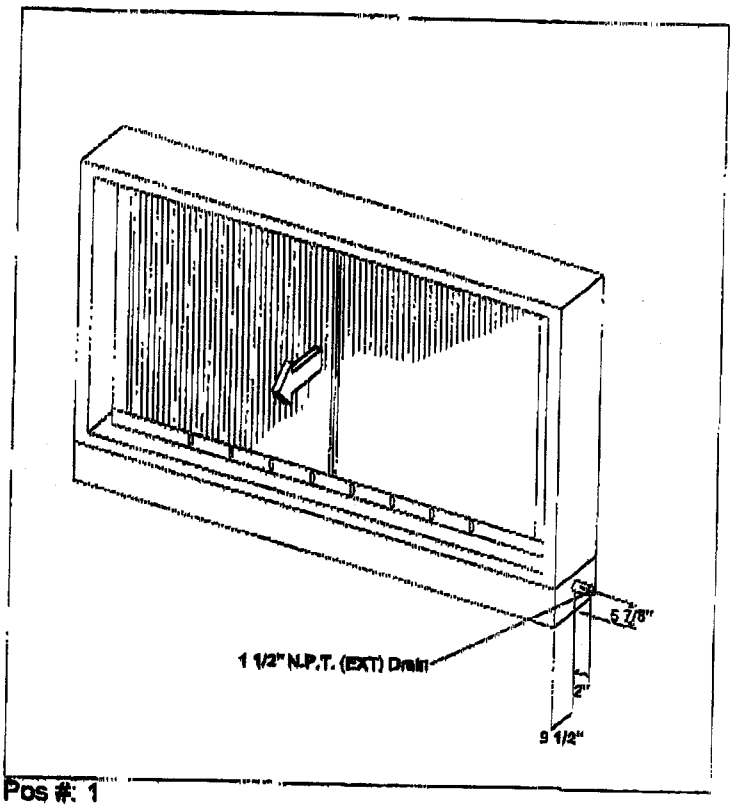

Pos #: 1
Module Type: Coil

Accessory - Indoor Central Station Air Handler Units
4 ROW K TOP COIL OR SINGLE COIL
Item: A1 Qty: 1 Tag(s): MCC-100

LDCC COOLING COIL
CALC & SELECTION 12 of 14

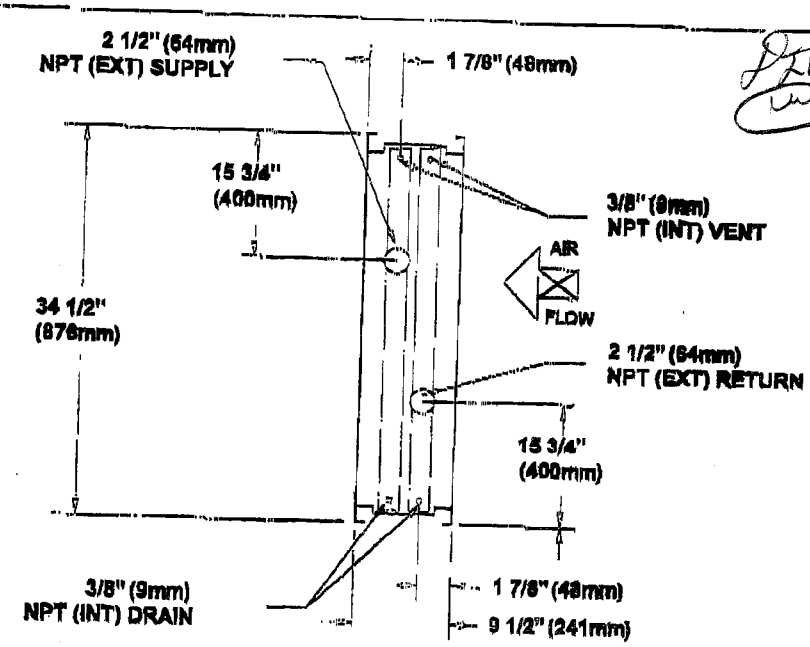

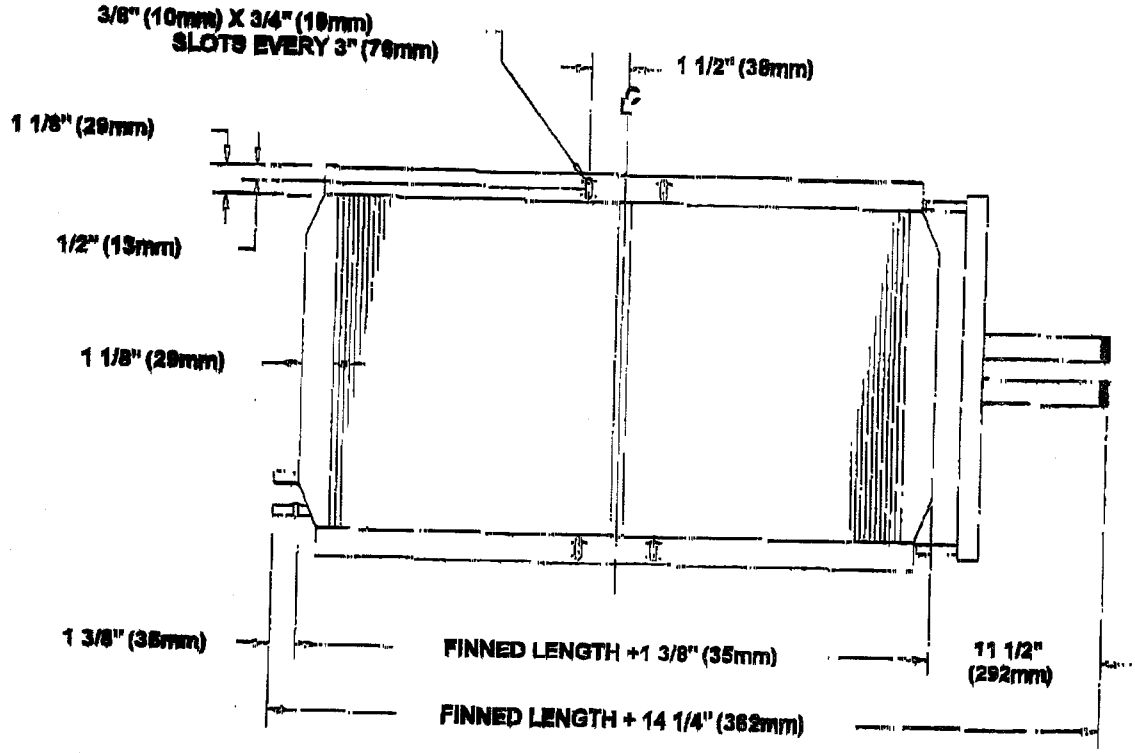

RIGHT HAND

Accessory - Indoor Central Station Air Handler Units
Shipping Coil Location Detail
Item: A1 Qty: 1 Tag(s): MCC-100

LDCC COOLING COIL
CALC & SELECTION

30
14.

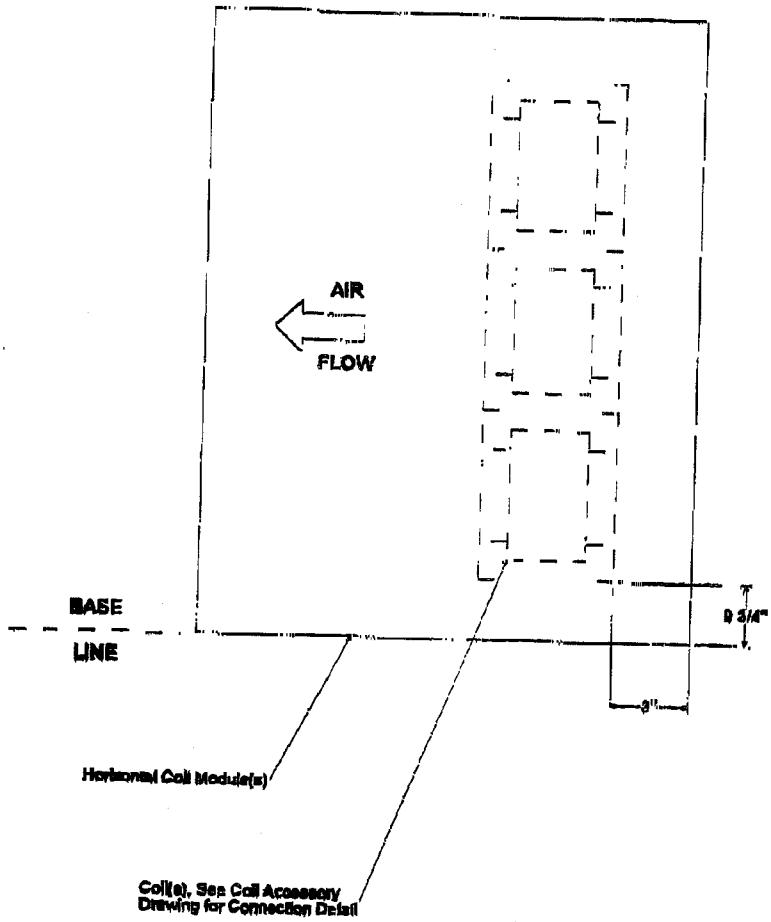

UNIT SIZE	COIL SIZE	QUANTITY	AREA ft2
100	FULL	3 - 33" x 141"	96.94

A great idea,
a great pump,
a great company.

Pumps/Pump Products

Cooling Coil Sump Pump

Little Giant Pump Company's origins date back to 1941, when an idea by a plumber named Doc Wolfe became the answer to water circulation for evaporative cooling. Called "a submersible vaporizer," this unique, patented pump design became the cornerstone for the hundreds of different pump models Little Giant Pump Company manufacturers and ships worldwide today.

In fact, derivatives of that basic "self-contained electric motor-driven submersible pump" are now a standard for quality and reliability for applications in parts washers, tile saws, carpet cleaning machines, water coolers and drainage systems.

In addition to a full line of wastewater, sump, effluent and sewage pumps, Little Giant Pump Company manufactures condensate pumps, magnetic drive pumps, pool cover pumps and a wide variety of utility pumps.

Little Giant is located in approximately 400,000 square feet of facilities at 3810 North Tulsa in Oklahoma City, Oklahoma, and employs approximately 550 people.

PREVIOUS NEXT

Automatic Condensate Removal Units

Condensate Pumps

550515	**1-ABS 115V 60HZ 6' W/PLUG** 1/150 HP 205 GPH @ 1 Foot of Head 10 Foot Shut Off Height 6' Cord Length
550525	**1-ABS 230V 50/60HZ 6'** 1/150 HP 205 GPH @ 1 Foot of Head 10 Foot Shut Off Height 6' Cord Length
551015	**2EC-SPT 115V 60HZ 6'** 1/40 HP 6' Cord Length
551025	**2EC-SPT 230V 50/60HZ 6'** 1/40 HP 300 GPH @ 1 Foot of Head 11.8 Foot Shut Off Height 6' Cord Length
551301	**34C-SPT 115V 60HZ 6'** 1/12 HP 310 GPH @ 1 Foot of Head 26 Foot Shut Off Height 6' Cord Length
551311	**34C-SPT 230V 50/60HZ 12'** 1/12 HP 310 GPH @ 1 Foot of Head 26 Foot Shut Off Height 12' Cord Length
553101	**VCL-14ULS 115V 60HZ 6'**

Holmes & Narver | Raytheon **MECHANICAL DESIGN CALCULATION SHEET**	Project Title: CCN CHILLED WATER SYSTEM OPTIMIZATION MASTER PLAN Project ID #100256

Calculation No. 3442.053.MCAL.001	PERFORMED BY : David F. Walker 10/16/01 DATE DAVID WALKER
Rev. No. X O	CHECKED BY Mike Slaman 10/16/01 DATE MIKE SLAMAN
Calculation Title: CHILLED WATER SYSTEM CALCULATIONS (5 SECTIONS)	

SECTION THREE:
LDCC/CCF COMBINED CHILLED WATER SYSTEM EXPANSION TANK CALCULATION

PAGES: 3

Expansion Tank Calculation DJW

SIZING THE EXTROL® DIAPHRAGM-TYPE HYDRO-PNEUMATIC TANK

by DJW 9/18/01

(We suggest that you make an office copy of this page when ready to calculate.) 10/16/01

1 of 3

Critical Sizing Procedure

Pipe Volume = 26,233
Let's Add 20% Safety Factor to include chiller volume, etc

THINGS YOU MUST KNOW:

1. Total System Water Content ..... (1) 31,480 gallons
2. Minimum System Temperature ..... (2) 40 °F.
3. Maximum System Temperature ..... (3) 80 °F.
4. Minimum Operating Pressure at EXTROL Tank ..... (4) 25 PSIG
5. Maximum Operating Pressure at EXTROL Tank ..... (5) 81.7 PSIG

SELECTION OF EXTROL MODEL:

6. Find and enter "Net Expansion Factor" (use TABLE 1) ..... (6) .00260
7. Amount of Expanded Water = line (1) × line (6) ..... (7) 81.8 gallons
8. Find and enter "Acceptance Factor" (TABLE 2) ..... (8) .581
9. Minimum Total EXTROL Volume = line (7) ÷ line (8) ..... (9) 140.8 gallons
10. Using TABLE 3 a, b, c, d, select an EXTROL that is at least equal to line (9) for "Total Volume" and line (7) for Max. Expanded Water Acceptance Gallons

TABLE 1...NET EXPANSION OF WATER

Maximum System Temp. °F.	Minimum System Temperature °F						
	40°F	50°F	60°F	70°F	80°F	90°F	100°F
60°F	.0005	.0049	—	—	—	—	—
70°F	.00149	.00143	.00094	—	—	—	—
80°F	.00260	.00254	.00204	.00111	—	—	—
90°F	.00405	.00399	.00350	.00256	.00145	—	—
100°F	.00575	.00569	.00520	.00426	.00315	.00170	—
110°F	.00771	.00765	.00716	.00622	.00511	.00366	.00196
120°F	.0100	.0099	.0095	.0086	.0074	.0060	.0043
130°F	.0124	.0123	.0118	.0109	.0098	.0083	.0066
140°F	.0150	.0149	.0145	.0135	.0124	.0110	.0093
150°F	.0179	.0178	.0173	.0164	.0153	.0133	.0121

Maximum System Temp. °F.	Minimum System Temperature °F						
	40°F	50°F	60°F	70°F	80°F	90°F	100°F
160°F	.0209	.0208	.0204	.0194	.0181	.0165	.0148
170°F	.0242	.0241	.0236	.0227	.0216	.0201	.0184
180°F	.0276	.0275	.0271	.0261	.0250	.0236	.0219
190°F	.0313	.0312	.0307	.0298	.0287	.0272	.0255
200°F	.0351	.0350	.0346	.0336	.0325	.0311	.0294
210°F	.0391	.0390	.0386	.0376	.0365	.0351	.0334
220°F	.0434	.0433	.0428	.0419	.0408	.0393	.0376
230°F	.0476	.0475	.0471	.0461	.0450	.0436	.0419
240°F	.0522	.0521	.0517	.0507	.0496	.0482	.0465

TABLE 2...ACCEPTANCE FACTORS

25

Maximum Oper. Pressure at Tank (Psig)	Minimum Operating Pressure at Tank (Psig)										
	5	10	12	15	20	30	40	50	60	70	80
27	0.527	0.408	0.360	0.288	0.168	—	—	—	—	—	—
30	0.560	0.447	0.403	0.336	0.224	—	—	—	—	—	—
35	0.604	0.503	0.463	0.403	0.302	0.101	—	—	—	—	—
40	0.640	0.548	0.512	0.457	0.366	0.183	—	—	—	—	—
45	0.670	0.586	0.553	0.503	0.419	0.251	0.084	—	—	—	—
50	0.696	0.618	0.587	0.541	0.464	0.309	0.155	—	—	—	—
55	0.717	0.646	0.617	0.574	0.502	0.359	0.215	0.072	—	—	—
60	0.736	0.669	0.643	0.602	0.536	0.402	0.268	0.134	—	—	—
65	0.753	0.690	0.665	0.627	0.565	0.439	0.314	0.188	0.062	—	—
70	0.767	0.708	0.685	0.649	0.590	0.472	0.354	0.236	0.118	—	—
75	0.780	0.725	0.702	0.669	0.613	0.502	0.390	0.279	0.167	0.056	—
80	0.792	0.739	0.718	0.686	0.634	0.528	0.422	0.317	0.211	0.106	—
90	0.812	0.764	0.745	0.716	0.669	0.573	0.478	0.382	0.287	0.191	0.096
100	0.828	0.785	0.767	0.741	0.698	0.610	0.523	0.436	0.347	0.261	0.174
110	0.842	0.802	0.786	0.762	0.723	0.642	0.561	0.481	0.401	0.321	0.241

NOTE: For additional Net Expansion of Water factors and Acceptance factors see the AMTROL Engineering Handbook. Consult Form 900-84 (revised 3/85) and Form 901-85 for further EXTROL information.

AMTROL INC.
WEST WARWICK, R.I. 02893

Printed in U.S.A.

AX Series EXTROLs are ASME certified and come in two styles, vertical and horizontal, that can be installed in a suspended or free-standing configuration. Eleven sizes are available in total tank volumes from 8 to 132 gallons.
MAX. WORKING PRESSURE: 125 psig
MAX. OPERATING TEMP: 240F

Model No.	Tank Volume (Gallons)	Max. Accept. (Gallons)	Vert. Series Height Inches	Series Length Inches	Dia. Inches
AX-15	7.8	2.4	—	19	12
AX-20	10.9	2.4	—	25-3/4	12
AX-40	21.7	4.8	—	49	12
AX-60	33.6	11.3	42-3/4	42-1/4	16
AX-80	44.4	22.6	56	55-1/4	16
AX-100	55.7	22.6	69	68-1/4	16
AX-120	68.0	34.0	44-1/4	40-1/4	24
AX-144	77.0	34.0	49-1/8	45-1/8	24
AX-180	90.0	34.0	56-1/2	52-1/2	24
AX-200	110.0	34.0	67	63	24
AX-240	131.7	45.2	76-3/4	74-1/4	24

TABLE 3a

L Series EXTROLS are ASME certified and eleven sizes are available in total tank volumes from 53 to 528 gallons. They are free standing on integral floor stands and are easily installed.
MAX. WORKING PRESSURE: 125 psig
MAX. OPERATING TEMP: 240F

Model No.	Tank Volume (Gallons)	Max. Accept. (Gallons)	Height Inches	Dia. Inches
200-L	53	53	37-13/16	24
300-L	79	79	51-3/4	24
400-L	105	105	65-11/16	24
500-L	132	132	79-5/8	24
600-L	158	158	65	30
800-L	211	211	83	30
1000-L	264	264	73-1/2	36
1200-L	317	317	85-7/8	36
1400-L	370	370	98-1/4	36
1600-L	422	422	71-1/4	48
2000-L	528	528	85-1/8	48

TABLE 3b

WX-"L" Series EXTROLS are ASME certified and seven models are available in total tank volumes from 158 to 528 gallons. Free-standing on integral floor stands for easy installation, they are designed for use with potable water.
MAX. WORKING PRESSURE:
125 psig *(For higher working pressures, consult factory.)*
MAX. OPERATING TEMP: 240F

Model No.	Tank Volume (Gallons)	Max. Accept. (Gallons)	Height Inches	Dia. Inches
WX-600-L	158	158	72-5/16	30
WX-800-L	211	211	90-1/4	30
WX-1000-L	264	264	84-1/2	36
WX-1200-L	317	317	97	36
WX-1400-L	370	370	109-1/4	36
WX-1600-L	422	422	80-1/2	48
WX-2000-L	528	528	93-1/2	48

TABLE 3c

SX Series EXTROLs are designed for lower pressure commercial and industrial heating systems where ASME certification is not required.
MAX. WORKING PRESSURE: 100 psig
MAX. OPERATING TEMP: 240F

Model No.	Tank Volume (Gallons)	Max. Accept. (Gallons)	Height Inches	Dia. Inches
SX-30V	14	11.3	21-5/8	15-3/8
SX-40V	20	11.3	29-1/2	15-3/8
SX-60V	32	11.3	44-1/4	15-3/8
SX-90V	44	34.0	33	22
SX-110V	62	34.0	43-7/8	22
SX-160V	86	34.0	59-1/16	22

TABLE 3d

AMTROL INC.

WEST WARWICK, RHODE ISLAND 02893

Form SD901-82

2 of 3

SUBMITTAL DATA

"L" SERIES (ASME)
EX-TROL® EXPANSION TANKS

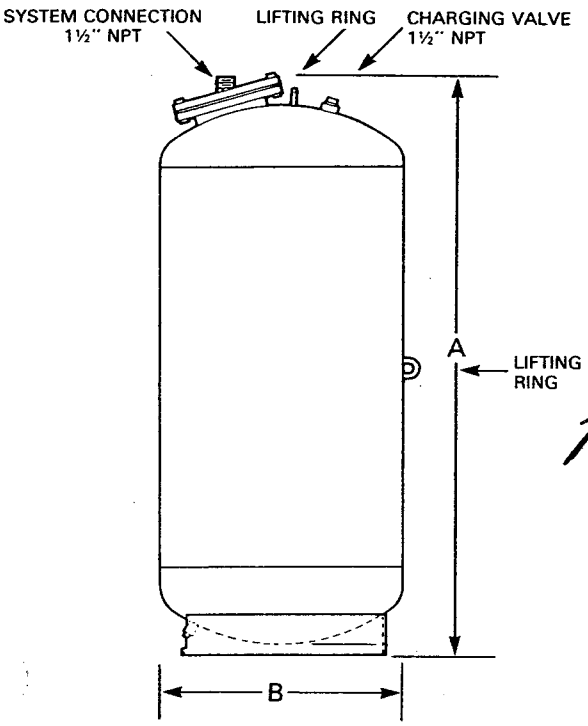

MODEL NUMBER	TANK VOLUME		"A" DIMENSION HEIGHT		"B" DIMENSION DIAMETER		SHIPPING WEIGHT	
	Gals.	Liters	Ins.	mm	Ins.	mm	Lbs.	kg
200-L	53	200	38⅜	975	24	610	204	93
300-L	79	300	52⅜	1330	24	610	250	113
400-L	105	400	66¼	1683	24	610	295	134
500-L	132	500	80¼	2038	24	610	340	154
600-L	158	600	65	1651	30	762	550	249
800-L	211	800	83	2108	30	762	680	308
1000-L	264	1000	73½	1867	36	914	760	345
1200-L	317	1200	85⅞	2181	36	914	864	392
1400-L	370	1400	98¼	2496	36	914	968	439
1600-L	422	1600	71¼	1810	48	1219	1580	717
2000-L	528	2000	85⅛	2162	48	1219	1810	821

MAXIMUM OPERATING CONDITIONS

Operating Temperature	240° F (115° C)
Working Pressure	125 PSIG (862 kPa)

MATERIALS OF CONSTRUCTION

Description	Standard Construction
Shell	Steel
Diaphragm	Heavy Duty Butyl

DESIGNED AND CONSTRUCTED PER ASME SECTION VIII
Allow 18" (460mm) Minimum Clearance for Piping

JOB NAME _____

LOCATION _____

_____

_____

ENGINEER _____

CONTRACTOR _____

CONTRACTOR P.O. NO. _____

SALES REPRESENTATIVE _____

MODEL NO. ORDERED _____

ASME CERTIFICATION REQUIRED _____ YES _____ NO

CHARGE PRESSURE _____ PSIG _____ kPa

Standard factory air charge is 12 PSIG. (80 kPa) unless otherwise specified.

3442.053.MCAL.001

MATERIALS REPORT
(selected pipelines)

3 of 3

09/03/02 3:05 pm

Specification	Material	Size (in)	Length (ft)	Valves & Fittings
8" and over	Steel	12		1 x Reducer - Enlargement (6 x 12 - 4) 1 x Reducer - Enlargement (12 x 16 - 14) 2 x Reducer - Enlargement (10 x 12 - 12) 1 x Reducer - Enlargement (12 x 14 - 12) 3 x Swing Check - Angled 13 x Tee - Flow Thru Branch 63 x Tee - Flow Thru Run
8" and over	Steel Sch: 40	14	14	2 x Butterfly 2 x Tee - Flow Thru Branch 2 x Tee - Flow Thru Run
8" and over	Steel Sch: 40	16	108	2 x Elbow - Long radius, r/d 1.5 (90°) 1 x Elbow - Short radius, r/d 1 (90°) 1 x Mitre Bend @ 45° 1 x Reducer - Contraction (16 x 12 - 16) 1 x Reducer - Enlargement (12 x 16 - 12) 4 x Tee - Flow Thru Branch 17 x Tee - Flow Thru Run
large bore	Steel Sch: 40	2.5	0.08	
large bore	Steel Sch: 40	12	5	1 x Reducer - Contraction (16 x 12 - 14) 1 x Tee - Flow Thru Run
large bore	Steel Sch: 40	16	143	3 x Butterfly 4 x Elbow - Long radius, r/d 1.5 (90°) 1 x Fixed K check valv 1 x Fixed K contrl valv 5 x Tee - Flow Thru Branch 11 x Tee - Flow Thru Run
Old Condenser Pipe-Cleaned	Steel Sch: 40	6	2	1 x Butterfly 1 x Reducer - Contraction (10 x 6 - 12) 1 x Tee - Flow Thru Branch
Old Condenser Pipe-Cleaned	Steel Sch: 40	10	2	1 x Butterfly 1 x Reducer - Contraction (12 x 10 - 12) 1 x Tee - Flow Thru Branch
small bore	Steel Sch: 40	0.75	108.02	10 x Elbow - Long radius, r/d 1.5 (90°) 4 x Gate - Wedge Disc 1 x Reducer - Contraction (2 x 0.75 - 3) 1 x Reducer - Enlargement (0.75 x 2 - 3) 4 x Tee - Flow Thru Branch 2 x Tee - Flow Thru Run
small bore	Steel Sch: 40	1.25	8	2 x Elbow - Short radius, r/d 1 (90°) 1 x Gate - Wedge Disc

SELECTED PIPE VOLUME: 26233 gallons

From Pipe Flow Program

Holmes & Narver | Raytheon **MECHANICAL DESIGN CALCULATION SHEET**	Project Title: CCN CHILLED WATER SYSTEM OPTIMIZATION MASTER PLAN Project ID #100256

Calculation No. 3442.053.MCAL.001	PERFORMED BY: David F. Walker 10/16/01 DATE DAVID WALKER
Rev. No. X O	CHECKED BY Mike Slaman 10/16/01 DATE MIKE SLAMAN
Calculation Title: CHILLED WATER SYSTEM CALCULATIONS (5 SECTIONS)	

SECTION FOUR
PUMP IMPELLER, VFD AND FAN INLET VANE DATA

PAGES: 6

James, Cooke, & Hobson, Inc.

3442.053.MCAL.001,Rev A
CHILLED WATER CALC
SECTION FOUR

Sales Engineers

PUMP IMPELLER, VFD, &
FAN INLET VANE DATA

PUMP

QUOTATION #011002-LANL TA-3 CCF Pmps

October 2, 2001

To: Bridgers & Paxton

Albuquerque, NM

Attn: David Walker
Fax:

Job Name: Los Alamos National Labs
CCF Bldg. Pump Revision

Location: Los Alamos, NM
Quotation By: Thornton Young
Bid Date: **BUDGET PRICING**

Unless otherwise stated: Prices are firm for 30 days from bid date, payment terms are NET 30 DAYS from shipment. Prices do not include any sales and/or use taxes. Applicable taxes will be added to the invoice at rate in effect at time of shipment. Interest shall accrue on past due amounts at 1.5% per month. Freight terms are F.O.B. factory full freight allowed.

Qty	Description	Each	Total
2	Complete rotating elements for Aurora model 413-BF 6 x 8 x 11 vertical split case pump serial number 87-02935. Includes impeller, shaft, bearings, mechanical seals, case and impeller wear rings, and shaft sleeves. Rotation to be right hand. These revisions are required to increase impeller size from 10.312" to 11.0" diameter. Pumps would become rated for 1281 gpm at 103' tdh.	$4,346.00	$8,692.00
2	40 hp motors, premium efficient VFD rated, 1800 rpm, 3/60/230-460 to replace the existing motors on above pumps because the existing motors are not VFD rated.	$2,980.00	$5,960.00
1	Complete rotating elements for Aurora model 413-BF 8 x 10 x 15A vertical split case pump serial number 93-10008. Includes impeller, shaft, bearings, mechanical seals, case and impeller wear rings, and shaft sleeves. Rotation to be right hand. These revisions are required to decrease impeller size from 13.5625" to 10.4375" diameter. Pump would become rated for 2100 gpm at 50' tdh.	$5,921.00	$5,921.00

Note: Prices include material only. No labor is included.

3442.053.MCAL.001 2A of 6
Rev 0
Section 4
DZW

PowerFlex™ 700S

Optimized Integration.

PowerFlex 700S DriveLogix AC Drive

The Allen-Bradley PowerFlex 700S DriveLogix™ AC drive, a version of PowerFlex 700 with embedded Logix , offers optimized integration for the most demanding drive control and drive system applications.

Integrated Installation

- Innovative bookshelf design optimizes panel space, allowing Zero Stacking™ or side-by-side mounting of the drives
- Drive design incorporates proven noise and voltage suppression characteristics, reducing installation concerns for noise-sensitive environments
- Embedded controller optimizes programming, hardware, training and space, improving systems integrity

Integrated Drive Commissioning

- Multilingual LCD Human Interface Module features S.M.A.R.T. Start, a start-up utility that provides users with fast and easy set-up of the most commonly programmed parameters, allowing simple drive set-up without in-depth knowledge of the parameter structure
- Optimized global voltage settings designed to worldwide standards allow quick set-up anywhere in the world
- PC tools such as RSLogix 5000™, and DriveTools™ 2000, which includes DriveExecutive™ software, assist with programming, configuration, monitoring and troubleshooting
- Flash upgrade for both the Drive Control and Programmable DriveLogix capabilities equip the designer with the latest control features available

Integrated Application Solutions

- Selectable, multiple high performance motor control algorithms, including field-oriented vector control, sensor and sensorless, brushless and V/Hz provide maximum application flexibility within one drive
- Standard transistor and available drive-mounted (or separately mounted) braking resistor provide cost-effective dynamic brake options
- Array of feedback options, including encoder, resolver, and high resolution encoder, optimize the accuracy of speed and position regulators
- Provides exceptional flexibility to cover many applications by offering a choice of standard I/O in 115V AC or 24V DC, user-configured option I/O cards and combination cards that include both communications and I/O capability. Dedicated I/O:
  - (2) analog I/O, (4) 24V DC digital inputs, and (3) 24V DC Digital Outputs
  - (2) Incremental Encoder (quadrate) Feedback
- Embedded Logix engine provides true programmability in multiple programming languages

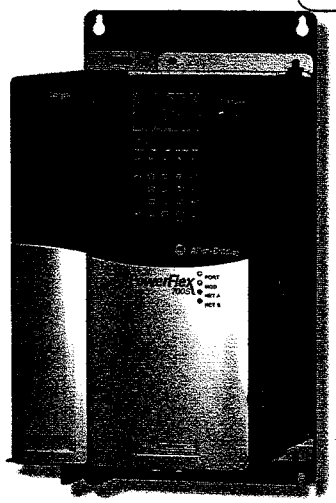

PowerFlex 700S DriveLogix AC Drive
0.37 to 30 kW; 0.5 to 40 hp (initial release)

Communications

The Allen-Bradley PowerFlex family of drives easily integrate into Rockwell Automation's NetLinx™ Open Network Architecture. This provides a common set of features and services for DeviceNet™, ControlNet™ and EtherNet/IP networks resulting in lower total cost of ownership. Users can easily manage information from shop floor to top floor and seamlessly integrate their complete system as they control, configure and collect data. PowerFlex 700S DriveLogix points of connection include:

- PowerFlex drives offer a dedicated internal communications option helping the user to cost-effectively assemble highly integrated applications that link drives to the manufacturing process through Rockwell Automation NetLinx Open Architecture based networks including: DeviceNet, ControlNet, Universal Remote I/O, and other open communications including Profibus and Interbus-S
- Status indicators for all internal communications options are visible on the cover for easy set-up and monitoring of drive communications
- SynchLink™, a high performance, high speed, drive-to-drive data link for transmitting synchronized drive and application data
  - Processor synchronization for multiple devices
  - 50 uSec maximum transfer rates with multiple data configurations
- High performance embedded NetLinx communication cards
- Flex I/O can be directly connected to DriveLogix for additional field device interface
- RS232 – Local serial programming

Allen-Bradley
Reliance Electric
Dodge
Rockwell Software
Rockwell Automation

Bringing Together Leading Brands in Industrial Automation

Performance Features	• Adaptive FOC maintains torque control accuracy without external motor thermal sensors • Inertia compensation reduces dynamic tracking errors • Adjustable backlash compensation for both feedback and forward signal paths	• Automatic Speed Feedback Loss/Recovery • Coarse to Fine Interpolation for position applications • Current Limit, Process Trim, Slip Compensation • Electronic Gear Ratio	• Registration Inputs for Time or Position • Resonant Frequency Compensation • S-Ramp and Lead-Lag Filters for Velocity Signal Condition of user inputs
Application Logic	• Selectable Motor Control Algorithms: - Field-Oriented Control (Sensor and Sensorless) - Brushless - V/Hz • SynchLink provides clock/task synchronization of up to 256 nodes with configuable packets of data	• Smooth Velocity Control with extremely low torque ripple with Velocity Observer and Encoder Signal conditioning routine • Virtual Encoder with Programmable Pulse-count • Application Programs can be written in Ladder or with Function Blocks using RSLogix 5000	
Operator Interface	• LCD HIM places drive information in a 7-line by 21-character display that supports a variety of languages		
Standards	• CSA/cUL Certified • UL Listed	• CE Marked EMC EN61800-3 Low Voltage EN60204-1 / EN50178	
Input Specifications	3-Phase Voltage: Common DC Bus Voltage Ratings: Frequency:	200-240V / 400-480V / 500-600V / 690V + 10% 325V / 650V / 810V / 930V 47 - 63 Hz	
Output Specifications	Voltage: Frequency Range: Intermittent Current: Instantaneous Over Current Trip:	Adjustable from 0V to rated motor voltage 0-400Hz To 110% for 60 seconds, 150% for 3 Seconds TBD	
Enclosure and Ambient Operating Temperatures	NEMA Open Type (I/P00): NEMA Type 1: IP20:	0° - 50° C (32° - 122° F) 0° - 40° C (32° - 104° F) 0° - 50° C (32° - 122° F)	

Dimensions mm (in) & Ratings

Frame 1 — 389 (15.31) H x 200 (7.87) W x 202.6 (7.98) D

Power	Class	Amps Continuous	Amps for 1 Minute	Amps for 3 Seconds
0.5 to 15 hp	480	2.1 to 22	2.4 to 24.2	3.2 to 33
0.37 to 11 kW	400	2.1 to 22	2.4 to 24.2	3.2 to 33
0.37 to 5.5 kW (0.5 to 7.5 hp)	200	2.2 to 22	2.4 to 24.2	3.3 to 33
TBD	600	TBD	TBD	TBD

Frame 2 — 389 (15.31) H x 285 (11.22) W x 202.6 (7.98) D

Power	Class	Amps Continuous	Amps for 1 Minute	Amps for 3 Seconds
20 to 25 hp	480	27 to 34	33 to 40.5	44 to 54
15 to 18.5 kW	400	30 to 37	33 to 45	45 to 60
7.5 kW (10 hp)	200	28	33	44
TBD	600	TBD	TBD	TBD

Frame 3 — 564 (22.20) H x 285 (11.22) W x 202.6 (7.98) D

Power	Class	Amps Continuous	Amps for 1 Minute	Amps for 3 Seconds
30 to 40 hp	480	40 to 52	51 to 60	68 to 80
22 kW	400	43	56	74
11 kW (15 to 20 hp)	200	42 to 54	46.2 to 63	63 to 84
TBD	600	TBD	TBD	TBD

Goes up to 100 hp

3 of 6

PowerFlex, SynchLink, DriveTools, DriveExecutive, RSLogix 5000, Zero Stacking and NetLinx are trademarks of Rockwell Automation.
DeviceNet is a trademark of the Open DeviceNet Vendor Association.
ControlNet is a trademark of ControlNet International, Ltd.

3442.053.MCHL.001, Rev 0
Sect 4

www.rockwellautomation.com

Corporate Headquarters
Rockwell Automation, 777 East Wisconsin Avenue, Suite 1400, Milwaukee, WI, 53202-5302 USA, Tel: (1) 414.212.5200, Fax: (1) 414.212.5201

Headquarters for Allen-Bradley Products, Rockwell Software Products and Global Manufacturing Solutions
Americas: Rockwell Automation, 1201 South Second Street, Milwaukee, WI 53204-2496 USA, Tel: (1) 414.382.2000, Fax: (1) 414.382.4444
Europe: Rockwell Automation SA/NV, Vorstlaan/Boulevard du Souverain 36-BP 3A/B, 1170 Brussels, Belgium, Tel: (32) 2 663 0600, Fax: (32) 2 663 0640
Asia Pacific: Rockwell Automation, 27/F Citicorp Centre, 18 Whitfield Road, Causeway Bay, Hong Kong, Tel: (852) 2887 4788, Fax: (852) 2508 1846

Headquarters for Dodge and Reliance Electric Products
Americas: Rockwell Automation, 6040 Ponders Court, Greenville, SC 29615-4617 USA, Tel: (1) 864.297.4800, Fax: (1) 864.281.2433
Europe: Rockwell Automation, Brühlstraße 22, D-74834 Elztal-Dallau, Germany, Tel: (49) 6261 9410, Fax: (49) 6261 1774
Asia Pacific: Rockwell Automation, 55 Newton Road, #11-01/02 Revenue House, Singapore 307987, Tel: (65) 351 6723, Fax: (65) 355 1733

Publication 20D-PP002C-EN-P – October, 2001
Supersedes Publication 20D-PP002B-EN-P – March 2001

Copyright © 2001 Rockwell Automation. All rights reserved. Printed in USA.

PUMP IMPELLER, VFD, & FAN INLET VANE DATA

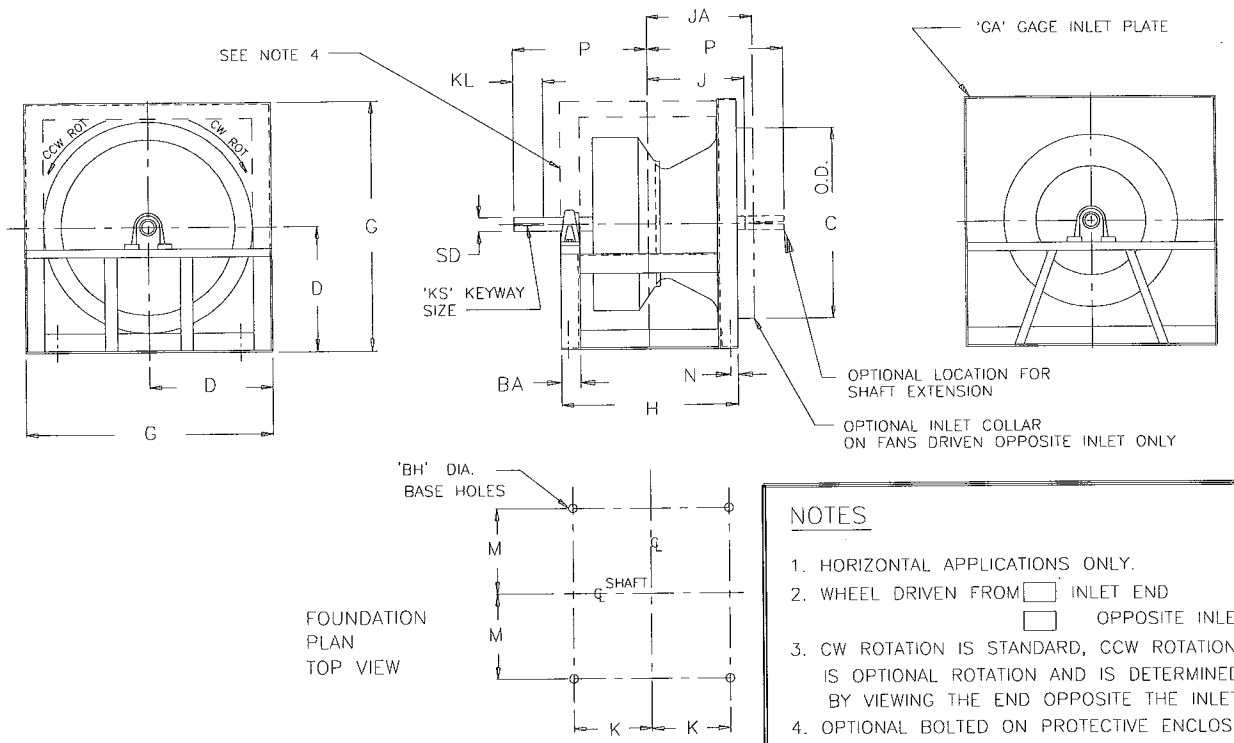

TYPE AFPF & BCPF PLENUM FANS CL I & II

TWIN CITY FAN & BLOWER
MINNEAPOLIS, MINNESOTA 55442

DRAWN 6/10/82
REVISED 4-5-94
DWG NO AC-1053ZJ

JOB:
LOC.
CONT.
ENG./ARCH.
S.O. NO.

SIZE	CLASS	ROT.	MOTOR HP	MOT. LOC.	TS

CFM	SP	RPM	BHP	UNIT NO.

ACCESSORIES REQ'D

NOTES

1. HORIZONTAL APPLICATIONS ONLY.
2. WHEEL DRIVEN FROM ☐ INLET END
   ☐ OPPOSITE INLET
3. CW ROTATION IS STANDARD, CCW ROTATION IS OPTIONAL ROTATION AND IS DETERMINED BY VIEWING THE END OPPOSITE THE INLET
4. OPTIONAL BOLTED ON PROTECTIVE ENCLOSURE

FAN INLET VANE

SIZE	BA	BH	C	D	G	GA	H	J CL 1	J CL 2	JA	K	KL	KS CL 1	KS CL 2	M	N	P CL 1	P CL 2	SD CL 1	SD CL 2	SIZE
122	1.50	0.31	13.25	9.50	19.00	14	12.75	6.75	6.75	7.38	5.75	2.50	.25x.13	.25x.13	6.75	0.63	10.00	10.00	1.000	1.000	122
135	1.50	0.44	14.56	10.00	20.00	14	13.88	7.31	7.31	7.94	6.31	2.50	.25x.13	.25x.13	7.38	0.63	10.56	10.56	1.000	1.000	135
150	2.00	0.44	16.19	11.00	22.00	14	16.00	7.88	7.94	9.00	7.13	3.00	.25x.13	.25x.13	8.25	0.88	11.63	12.00	1.000	1.187	150
165	2.00	0.44	17.75	12.00	24.00	14	17.25	8.50	8.56	9.63	7.63	3.00	.25x.13	.25x.13	8.75	0.88	12.25	12.63	1.000	1.187	165
182	2.00	0.44	19.50	13.00	26.00	14	18.50	9.25	10.25	10.75	8.38	3.50	.25x.13	.38x.19	9.63	0.88	13.81	14.63	1.187	1.437	182
200	2.00	0.56	21.38	14.50	29.00	14	19.75	10.94	10.94	11.38	9.00	3.50	.38x.19	.38x.19	10.63	0.88	15.31	15.31	1.437	1.437	200
222	2.00	0.56	23.75	16.00	32.00	12	21.50	11.81	11.81	12.25	9.88	4.00	.38x.19	.38x.19	11.75	0.88	16.69	16.69	1.437	1.437	222
245	2.00	0.56	26.06	17.00	34.00	12	23.25	12.69	12.81	13.13	10.75	4.50	.38x.19	.38x.19	12.88	0.88	18.06	18.44	1.437	1.687	245
270	2.00	0.56	28.50	19.00	38.00	12	25.25	13.63	13.75	14.13	11.75	4.50	.38x.19	.38x.19	14.13	0.88	19.00	19.38	1.437	1.687	270
300	2.50	0.56	31.63	21.00	42.00	10	28.75	15.00	15.25	15.88	13.25	5.00	.38x.19	.50x.25	15.88	1.13	21.13	21.25	1.687	1.937	300
330	2.50	0.56	34.75	23.00	46.00	10	31.00	16.13	16.63	17.00	14.38	5.00	.38x.19	.50x.25	17.38	1.13	22.25	22.88	1.687	2.187	330
365	2.50	0.56	38.50	25.50	51.00	10	33.75	17.75	18.50	18.88	15.75	5.00	.50x.25	.63x.31	18.88	1.13	23.75	24.63	1.937	2.437	365
402	3.00	0.81	42.44	28.00	56.00	10	37.75	19.25	20.00	20.38	17.50	5.00	.50x.25	.63x.31	20.88	1.38	25.25	26.13	1.937	2.437	402
445	3.00	0.81	46.88	31.00	62.00	10	41.00	20.94	21.50	22.50	19.13	5.50	.50x.25	.63x.31	22.88	1.38	27.44	29.19	1.937	2.687	445
490	3.00	0.81	51.63	34.00	68.00	10	44.50	22.75	23.25	24.25	20.88	5.50	.50x.25	.63x.31	25.38	1.38	30.25	30.88	2.187	2.687	490
542	4.00	0.81	57.13	38.00	76.00	10	50.75	25.38	25.38	26.38	23.50	6.00	.63x.31	.75x.38	27.63	1.88	33.38	33.75	2.437	2.937	542
600	4.00	0.81	63.13	42.00	84.00	10	55.25	28.25	28.44	28.63	25.75	6.00	.75x.38	.88x.44	30.63	1.88	35.50	36.88	2.937	3.437	600
660	4.00	0.81	69.38	46.00	92.00	10	60.00	30.56	31.63	32.06	28.13	7.00	.75x.38	1.00x.50	33.13	1.88	39.88	40.81	2.937	3.937	660
730	5.00	0.81	76.75	51.00	102.0	10	67.50	34.06	34.31	34.75	31.38	7.50	.88x.44	1.00x.50	37.13	2.38	43.50	44.00	3.437	3.937	730
807	6.00	0.81	84.88	56.00	112.0	7	75.75	37.31	39.31	38.88	35.00	8.00	1.00x.50	1.00x.50	40.88	2.88	47.50	49.56	3.937	4.437	807
890	6.00	0.81	93.38	62.50	125.0	7	82.25	40.56	43.31	43.13	38.25	8.00	1.00x.50	1.00x.50	46.38	2.88	50.75	53.44	3.937	4.937	890

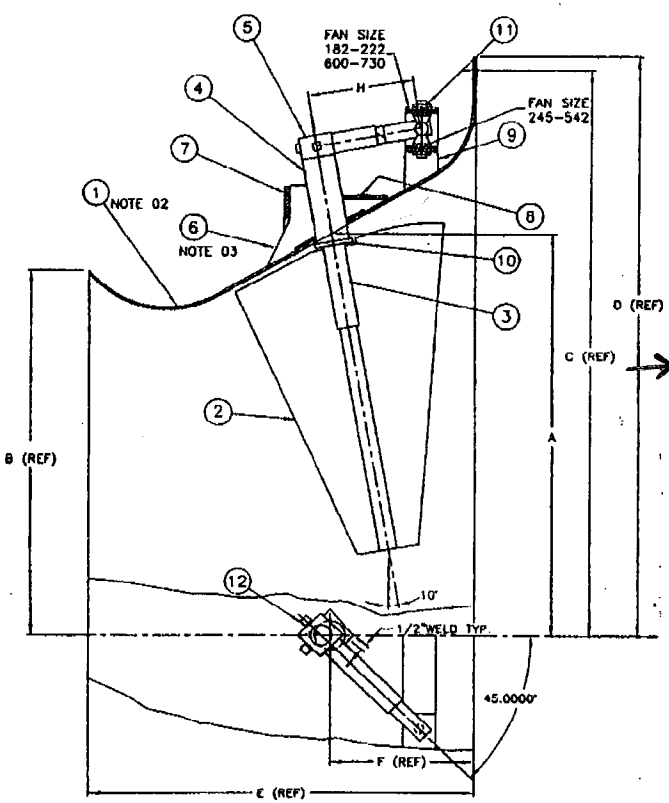

FAN SIZE	BC/BAF CLASS	BCS CLASS	A RAD.	B RAD.	C RAD.	D RAD.	E	F	H	BLADE QUANTITY	BLADE (2) AS15001	BLADE ROD (3) AS7408	BEARING BLOCK ASSEMBLY (4) AS15008	ROD END ASSEMBLY (5) BS14999	SUPPORT RING GUSSET (6) AS7409	SUPPORT RING VERTICAL (7) AS15014	SUPPORT RING HORIZONTAL (8) AS7406	CONTROL RING SEGMENT (9) AS7405	WASHER (10) AS7413	HEX NUT (11)	SQ HD SET SCREW QUANTITY (12) 5/16-18x.50 LG
165	I-IV	17	5.94	5.80	9.50	10.00	5.91	2.94	1.69	8	1	4	5	5	–	–	–	1	1	5/16-24	16
182	I-V	17.22	6.56	6.38	10.50	11.00	6.53	3.25	1.69	8	2	4	5	5	–	–	–	2	1	5/16-24	16
200	I-V	17.22	7.09	7.00	11.69	12.19	7.16	3.56	1.75	8	3	4	5	6	–	–	–	3	1	5/16-24	16
222	I-V	17.22	8.00	7.80	12.75	13.31	7.97	3.97	1.94	8	4	4	5	6	–	–	–	4	1	5/16-24	16
245	I-V	17.22	9.16	8.61	13.88	14.31	8.78	3.75	2.50	11	5	1	1	1	–	–	1	5	1	5/16-24	22
270	I-V	17.22	10.19	9.44	14.88	15.50	9.66	4.13	2.72	11	6	1	1	1	–	–	2	6	1	5/16-24	22
270		26	10.19	9.44	14.88	15.50	9.66	4.13	3.00	11	7	2	4	11	–	–	2	7	2	5/16-24	22
300	I-IV	17	11.47	10.50	16.81	17.44	10.72	4.00	3.00	11	8	1	1	1	–	–	3	8	1	5/16-24	22
300	V	22.26	11.47	10.50	16.81	17.44	10.72	4.00	3.06	11	9	2	4	11	–	–	3	9	2	5/16-24	22
330	I-III		12.66	11.58	18.63	19.25	11.81	4.38	3.25	11	10	1	1	1	–	–	4	10	1	5/16-24	22
330	IV-V	17.22.26	12.66	11.58	18.63	19.25	11.81	4.38	3.31	11	11	2	4	11	–	–	4	11	2	5/16-24	22
365	I,II	14	13.97	12.75	20.38	21.00	13.06	4.88	3.53	11	12	1	1	1	–	–	5	12	1	5/16-24	22
365	III-V	17.22.26	13.97	12.75	20.38	21.00	13.06	4.88	3.78	11	13	2	2	2	1	1	5	13	2	1/2-20	22
402	I,II	14	15.38	14.02	22.06	22.69	14.41	5.34	3.81	11	14	1	1	1	–	–	6	14	1	5/16-24	22
402	III-V	17.22	15.38	14.02	22.06	22.69	14.41	5.34	4.06	11	15	2	2	2	1	2	6	15	2	1/2-20	22
402		26	15.38	14.02	22.06	22.69	14.41	5.34	4.09	11	16	3	3	4	1	2	6	16	3	1/2-20	22
445	I-IV	14.17	17.19	15.50	24.31	24.94	15.94	5.91	4.47	11	17	2	2	2	1	3	7	17	2	1/2-20	22
445	V	22.26	17.19	15.50	24.31	24.94	15.94	5.91	4.47	11	18	3	3	4	1	3	7	18	3	1/2-20	22
490	I-III	14	19.00	17.06	26.56	27.19	17.53	6.50	4.84	11	19	2	2	2	1	4	8	19	2	1/2-20	22
490	IV,V	17.22.26	19.00	17.06	26.56	27.19	17.53	6.50	4.88	11	20	3	3	4	1	4	8	20	3	1/2-20	22
542	I,II	14	21.00	18.89	29.63	30.38	19.41	7.19	5.25	11	21	2	2	2	1	5	9	21	2	1/2-20	22
542	III-V	17.22	21.00	18.89	29.63	30.38	19.41	7.19	5.25	11	22	3	3	4	1	5	9	22	3	1/2-20	22
600	I,II	14	23.19	20.89	32.63	33.38	21.47	7.97	5.72	11	23	2	2	2	1	6	10	24	2	1/2-20	22
600	III,IV	17	23.19	20.89	32.63	33.38	21.47	7.97	5.75	11	24	3	3	4	1	6	10	25	3	1/2-20	22
660	I-IV	14.17	25.50	22.98	35.63	36.38	23.63	8.75	6.22	11	25	3	3	4	1	7	11	27	3	1/2-20	22
730	I,II	14	28.25	25.41	39.50	40.25	26.13	9.69	6.81	11	26	3	3	4	1	8	12	30	3	1/2-20	22

NOTES:
01. ON ITEMS 2,3,4,5,6,10,11 QTY. OF ONE REQUIRED PER BLADE.
ON ITEM 9 SIZES 165-222 QTY. OF SEVEN REQUIRED.
ON SIZES 245-730 QTY. OF TEN REQUIRED.
02. FOR ITEM 1, REF DWG BS120 IN HOUSING & INLET BOOK.
03. SKIP WELD ITEM 6 TO ITEM 4 (BEARING BLOCK ASS'Y)
THAN WELD ITEM 7 TO ITEM 6.

PUMP IMPELLER, VFD, &
FAN INLET VANE DATA
CHILLED WATER CALC
SECTION FOUR

REVISIONS		REV BY / CHKD BY	DATE
F	PER ECN 0698	BJB	4/6/95
G	PER ECN 847	TM	6/16/00
H	PER ECN 0869	TM	03/02/01

TWIN CITY FAN & BLOWER
5959 TRENTON LANE MINNEAPOLIS, MN. 55442
MEMBER OF AIR MOVEMENT AND CONTROL ASSOCIATION

DRN BY AC DATE 6/25/94 CHKD BY DATE
APPRVD BY DATE CERT BY DATE

TITLE NESTED INLET VANE ASSEMBLY, W/O CENTER HUB FOR BC, BCS, AND BAF FANS & AFPL & AFPF

DRAWING NO. BS 7400 REV. H ITEM 1

6 of 6

3442.053.MCAL.001,Rev A
CHILLED WATER CALC
SECTION FOUR

PUMP IMPELLER, VFD, &
FAN INLET VANE DATA

TO

B & P

DAVID WALKER

FROM

THE JOHNSTON CO.
4800 B Hardware NE
Albuquerque, NM 87109
Tel: (505)343-8190
Fax: (505)343-9981

SUBJECT

INLET VANES

DATE

MESSAGE:

COST FOR (1) SET INLET VANS FOR THE 'AFPF' FANS = $1,630.00/EA.

x4

$6,520.00

ORIGINATOR-DO NOT WRITE BELOW THIS LINE

REPLY TO →

SIGNED

REPLY

DATE

SIGNED

SEND PARTS 1 AND 3 INTACT-PART 1 WILL BE RETURNED WITH REPLY

RMCC-848-3
PRINTED IN U.S.A.

RETURN TO ORIGINATOR

Holmes & Narver | Raytheon **MECHANICAL DESIGN CALCULATION SHEET**	Project Title: CCN CHILLED WATER SYSTEM OPTIMIZATION MASTER PLAN Project ID #100256

Calculation No. 3442.053.MCAL.001	PERFORMED BY : David F. Walker 10/16/01 DATE DAVID WALKER
Rev. No. ~~A~~ 0 PCW 9/4/02	CHECKED BY Mike Slaman 10/16/01 DATE MIKE SLAMAN
Calculation Title: CHILLED WATER SYSTEM CALCULATIONS (5 SECTIONS)	

SECTION FIVE

CONDENSER WATER PUMP – ~~PCT~~-06 CALCULATION

PAGES: 6 – changed Back to PCW-06

CCN Chilled Water Sys. Opt. PL

BRIDGERS & PAXTON
CONSULTING ENGINEERS, INC.

3442.053.MCAL.001,Rev A
Section 5: Water Pump PCT-06 Calculation

SHEET NO. 1 OF 6
CALCULATED BY DSW DATE 10/16/01
CHECKED BY [illegible] DATE 10/16/01
SCALE JOB #

PCT-6 → changed back to PCW-06

The existing pump will be oversized after CCF plant is gone. Condenser Water Replacement Pump for pump PCW-6, can have it's impeller trimmed to meet the lower duty imposed by CWR-1 but maintenance claims having 1. Head Calc. had trouble with the pump — so replace it.

- 80 ton chiller condenser = 20.44'
- 4-way chiller condenser valve = 5.0'
- Piping: 80' x 225'/100' = 1.8' ⇒ Say 5.0' for run out to Tower
- Fittings = 3.0
- Isolation valves $(10) \times \left(\frac{2100\,gpm}{4300}\right)^2 \times 2.31$ = 5.5'
- Check valve: $\Delta H = K\frac{V^2}{2g} = 5.6\left(\frac{8.6^2}{2 \times 32.2\,ft/s^2}\right)$ = 6.4'

45.3'

Say 45'

Note: The other existing condenser water pumps are sized for 2100 gpm and 46 ft head. In talking with Doug Hefele at LANL, he felt that it may be possible that the other pumps were oversized and more water is flowing through the condenser than what is designed. I had him obtain the following information:

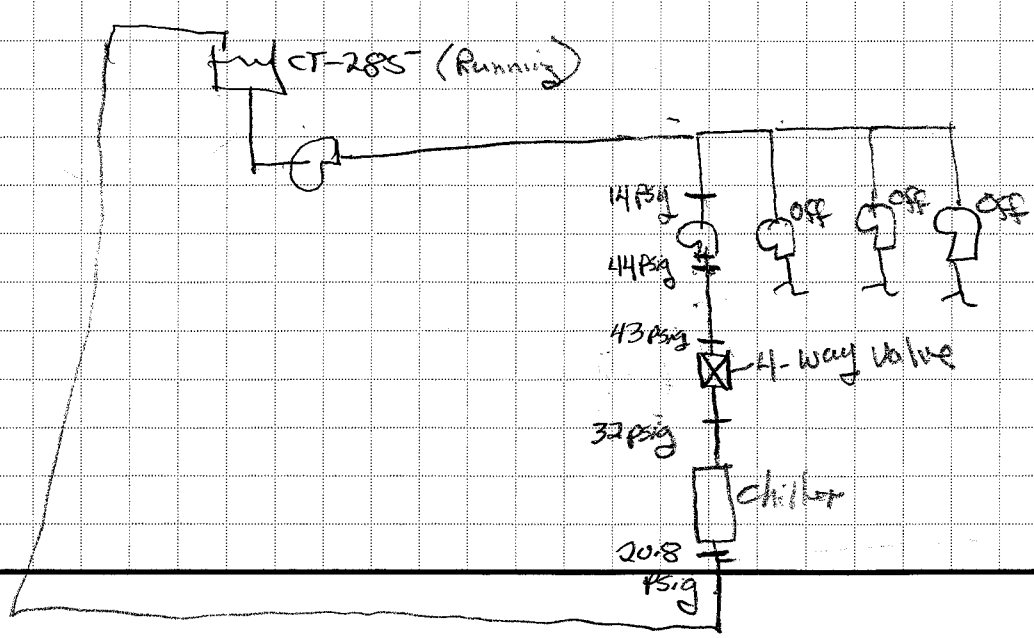

PCT-6 Condenser Water Replacement Cont.

(changed back to PCW-06

- Note: • The 4-way valve is listed from the manufacturer as only having a 5.0 ft drop @ 2100 gpm. Doug Hefele read 11 psig on 25 ft. drop.

  • The chiller condenser has a designed 8.2 psig drop across it at 2100 gpm. Doug Hefele measured 11.2 psig.

So it's very likely that more water is flowing than is designed through the existing systems. Though our calcs indicate that less system pressure loss should be used in sizing the replacement pump for PCW-6, Doug felt that we should provide the larger pump/motor for a little more head than what the other condenser pumps are designed for.

So select pump based on 2100 gpm @ 75 ft. Head. We'll specify that the impellers be trimmed to match the system head pressure after the system is balanced. Mostly likely the system head will be closer to 45 ft.

$$bhp = \frac{2100\ gpm \times 75\ ft}{3960 \times .83 \times .91} = \underline{52.6\ bhp}$$

3960: flow conversion to gpm; .83: pump eff.; .91: motor eff.

Altitude deration: 52.6 hp × 1.163 × 1.10 = 67.3 bhp.

(1.163: 14% derate; 1.10: safety 10%)

use 75 hp motor

Centrifugal Pump - Detail Report

Pump Series:	VSC	Pump Size:	10X10X13L
Performance Rank:	1	Pump Speed:	1170
Cost Rank:	6		
Total Capacity:	2100.0 gpm	Total Head:	75.0 Feet
Efficiency:	83.83 pct	NPSH req:	12.75 Feet
Discharge Size:	10.000 in	Velocity:	8.54 fps
Suction Size:	10.000 in	Velocity:	8.54 fps
Impeller Diameter:	13.125"	PRV Size:	
Max BHP:	60.69	(at design:	54.40 pct)
Pump Power, BHP:	47.465	(	35.39 Kw)
Motor Power, HP:	50.00	(BHP/HP =	0.95)

Motor: Century AC MOTOR 230/460V S365T SC DP R683
50.000 HP 1180 RPM 6 poles 60 Hz 3 phase

Voltage:	460	RPM:	1184.71	Eff:	91.56
AMP:	55.72	P.F.:	87.08	KVA:	44.39

Annual Operating Cost: $33862.50 for 8760.0 hours annually at $0.10/Kwh

4 of 6

3442.053.MCAL.001,Rev A
Section 5: Water Pump PC
06 Calculation

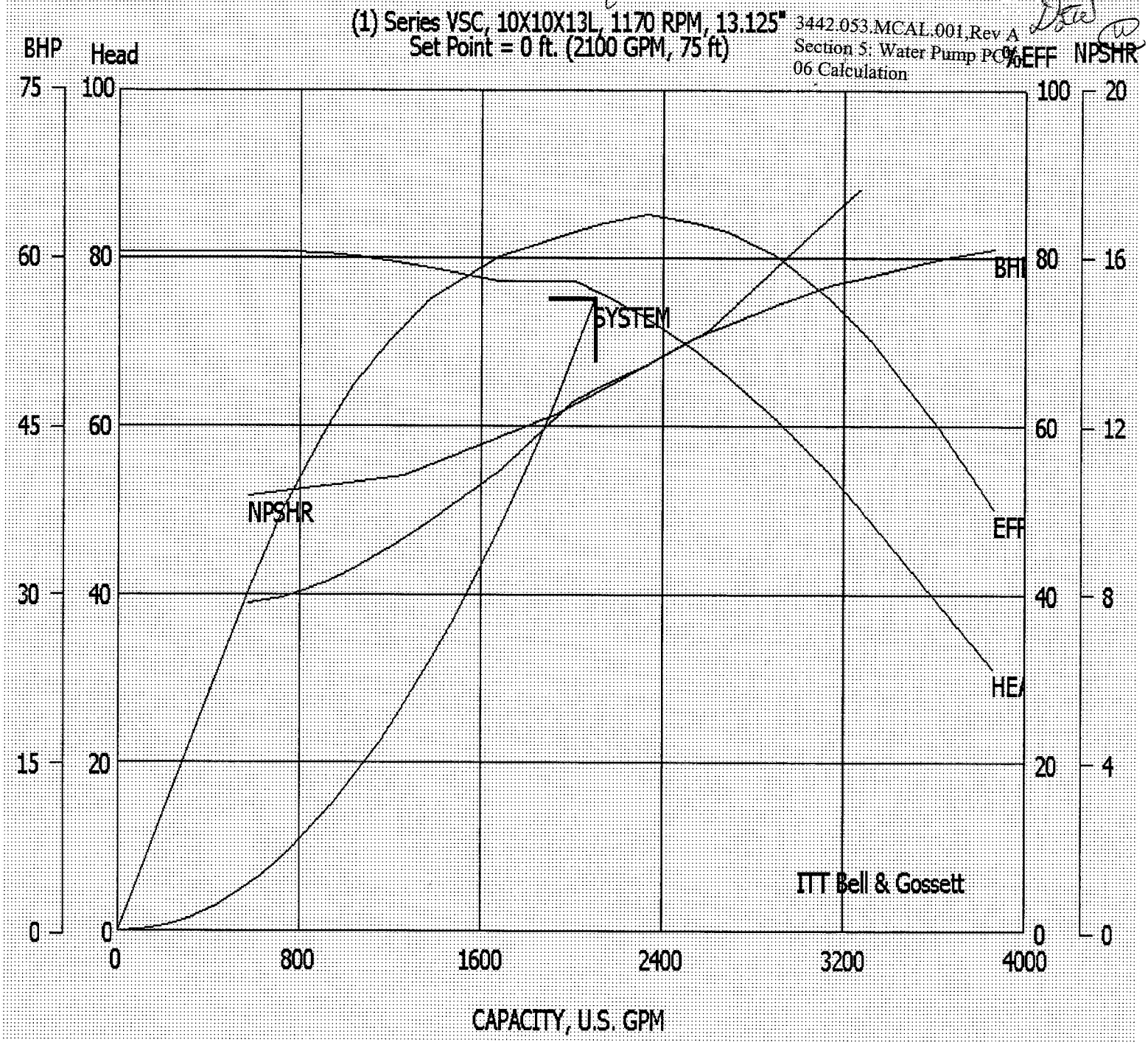

Thornton Young
Bridgers & Paxton - David Walker

04/16/02

5 of 6

PUMP DATA SHEET
AURORA PUMPS

Selection file: (untitled)
Catalog: AURORA60.MPC v 1

Attn: DAVID WALKER
2 Pages

Curve: PC117393

Design Point: Flow: 2100 US gpm
Head: 75 ft

Pump: **410-HSC - 1800** **Size: 8x10x12**
Speed: 1750 rpm Dia: 11.75 in

Limits: Temperature: 275 °F Sphere size: 0.938 in
Pressure: 250 psi_g Power: --- bhp

Specific Speed: Ns: 3305 Nss: 6891

Dimensions: Suction: 10 in Discharge: 8 in

Motor: 50 hp Speed: 1800 Frame: 326T
NEMA Standard ~~TEFC~~ Enclosure ODP.
sized for Max Power on Design Curve

Fluid: Water Temperature: 60 °F
SG: 1
Viscosity: 1.122 cP
Vapor pressure: 0.2568 psi_a
Atm pressure: 14.7 psi_a

NPSHa: --- ft

Piping: System: ---
Suction: --- in
Discharge: --- in

8 weeks Lead Time
$12,500

DJW

--- Data Point ---
Flow: 2100 US gpm
Head: 75 ft
Eff: 81%
Power: 49 bhp
NPSHr: 16.1 ft

-- Design Curve --
Shutoff Head: 109 ft
Shutoff dP: 47.1 psi
Min Flow: - US gpm
BEP: 82% eff
@ 2236 US gpm
NOL Pwr: 49.6 bhp
@ 1997 US gpm

-- Max Curve --
Max Pwr: 52.4 bhp
@ 1975 US gpm

Let's use 75 hp.

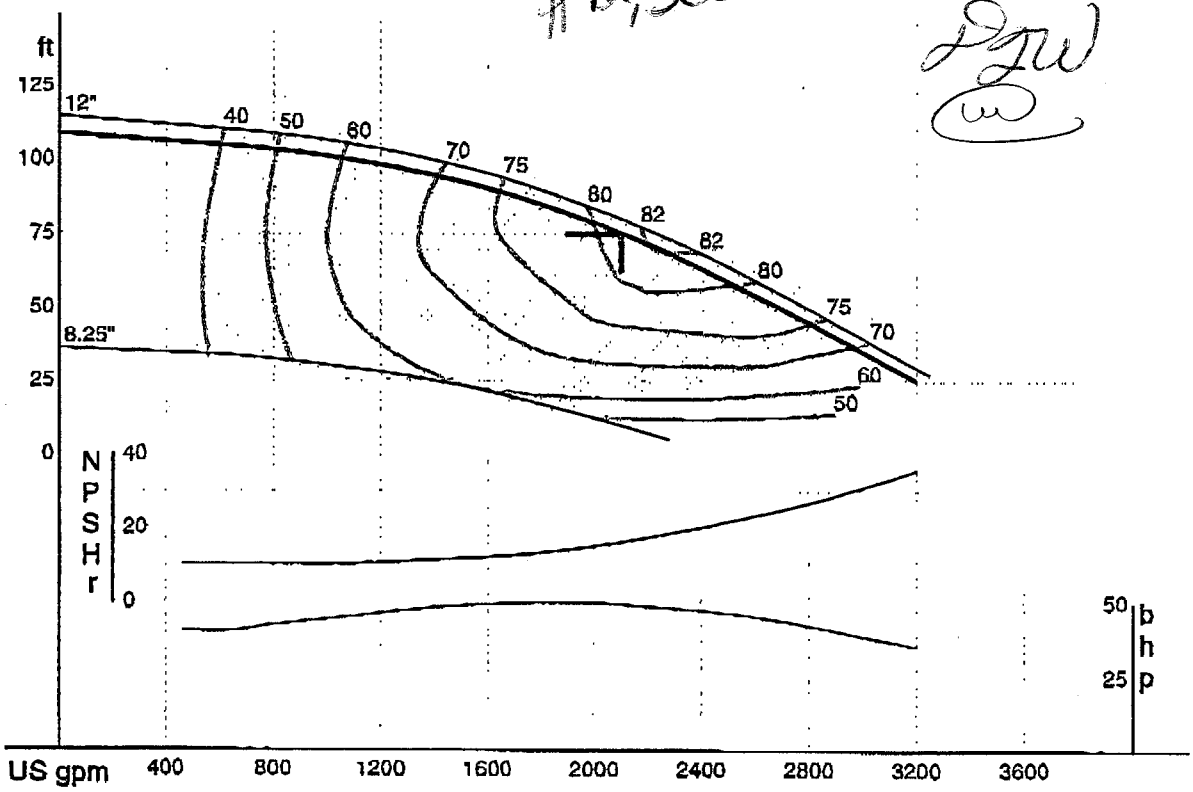

--- PERFORMANCE EVALUATION ---

Flow US gpm	Speed rpm	Head ft	Pump %eff	Power bhp	NPSHr ft	Motor %eff	Motor kW	Hrs/yr	Cost /kWh
2520	1750	57.8	80	45.9	21.9				
2100	1750	75	81	49	16.1				
1680	1750	88	76	49.3	12.4				
1260	1750	96.8	66	46.6	10.6				
840	1750	103	51	42.5	10				

3442.053 MCAL
.001 Rev 0
Sect 5

LANL Application

Company Name: James, Cooke and Hobson, Inc.
Project Name: Bridgers & Paxton - David Walker
Author Name: Thornton Young
Date Created: 4/16/2002

6 of 6

AURORA®
PENTAIR PUMP GROUP

Single Stage Vertical Split Case-413

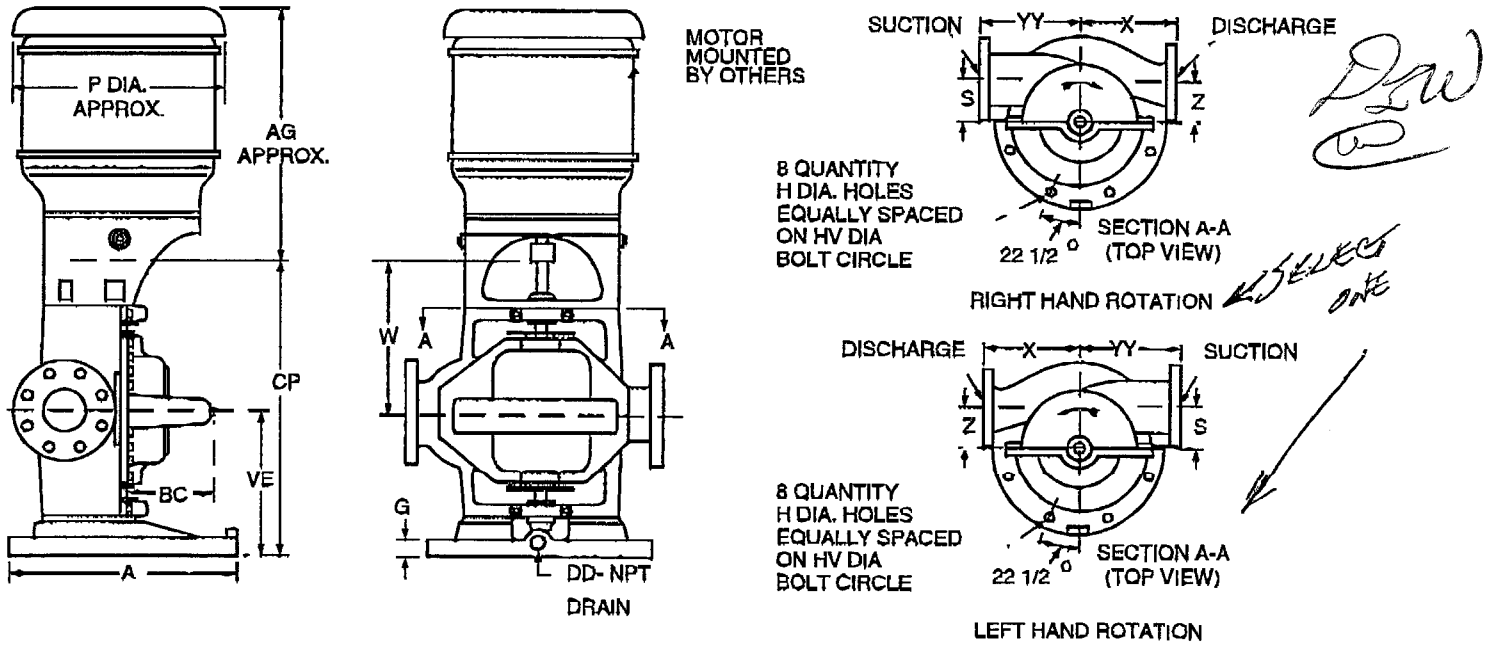

Units of Measurement: Inches

DISC. SIZE	SUCT SIZE	SERIES	A	G	H	HV	S	W	X	Z	BC	VE	YY	DD	P	AG	CP
8.0	10.0	5	30.0	2.0	0.88	28.0	8.0	18.0	17.0	9.0	11.56	17.0	17.75	0.75	21.0	25.0	41.0

Pump Type: 410-HSC	Pump Size: 8x10x12
Pump Speed: 1800 RPM	Pump Weight Only: 1040.0 lbs
Frame Size: 364HP	Power Frame: N/A
Cover Size:	Frequency: 60 HZ
Coupling: Standard	Pump Flange: None Entered
Base Plate: Cast Iron Drip Rim on Vertical not Chair Mounted Only	Discharge Position: None Entered
Enclosure: Open Drip Proof	Rotation: None Entered
Voltage/Phase: 3 PH 230/460	HorsePower:60

Drawing Notes:

1. MOTORS WITH 125 HP (93.213 KW) AND ABOVE WILL BE 460V (60 HZ) OR 380V (50 HZ) ONLY.
2. ALL DIMENSIONS ARE IN INCHES OR METRIC (MILLIMETERS).
3. DIMENSIONS MAY VARY ± 3/8 (10 mm).
4. NOT FOR CONSTRUCTION PURPOSES UNLESS CERTIFIED.
5. COUPLING GAP MAY VARY 1/8 TO 1 INCH (3 to 25 mm).
6. SUCTION AND DISCHARGE FLANGES - ANSI FLAT FACE.
7. HEIGHT (AG) AND DIAMETER (P) DIMENSIONS OF MOTOR WILL VARY BASED ON MAKE AND STYLE OF MOTOR.
   DIMENSIONS SHOWN REFLECT AURORA STANDARD MOTORS.
   SEE INDIVIDUAL MOTOR SUPPLIER DIMENSIONAL DATA SHEETS FOR YOUR APPLICATION.

CONDUIT BOX IS SHOWN IN APPROX

8. INFORMATION CONTAINED HEREIN IS CONFIDENTIAL; IT IS THE PROPERTY OF PENTAIR PUMP GROUP; IT IS TO BE USED SOLELY FOR THE PURPOSE PROVIDED, AND IT IS NOT TO BE DISCLOSED TO

3442.053. MCAL
001 Rev 0
Sect 5