HNR

STRUCTURAL CALCULATION COVER SHEET

Date: 10/16/01

1 of 44

Calculation No:3442.053.SCAL.002,
Calculation Title: LDCC TRAPEZE DESIGN FOR 2-12" DIA AND 2-6" DIA PIPES
Project ID # 100256
Project Title: CCN CHILLED WATER SYSTEM OPTIMIZATION MASTER PLAN

ORIGINAL AND REVISED CALCULATION/ANALYSIS APPROVAL

	Rev. A Name/Signature/Date	Rev. 0 Name/Signature/Date	Rev._ Name/Signature/Date
Originator: DAVID APPLE	10/16/01	8/28/02	
Checked By: JIM WEEKS	10/16/01	8/28/02	
Approved By: JIM WEEKS	10/16/01	8/28/02	
Other:			

AFFECTED DOCUMENTS

Document Number	Document Title	Rev. Number
Drawing No. C52952	CCN Chilled Water System Optimization Master Plan	T1, M1-M33 Rev. B E1-E14 Rev. A
Drawing No. C52952	CCF/LDCC Cooling Plant Modifications	Rev. 0
Drawing No. C53116	LDCC EC-1 Modifications	Rev. 0

Record of Revision

Rev.	Reason for Revision
REV A	FIRST SUBMITTAL OF CALCULATIONS
Rev. 0	All pages of this calculation 3442.053.SCAL.002 Rev. 0, Rev. A are considered approved and released based upon no technical changes to the calculation during/after formal review.

Holmes & Narver | Raytheon **STRUCTURAL DESIGN CALCULATION SHEET**	Project Title: CCN CHILLED WATER SYSTEM OPTIMIZATION MASTER PLAN Project ID #100256 Task Order #053

Calculation No. 3442.053.SCAL.002	PERFORMED BY : _____ 10/16/01 DAVID APPLE
Rev. No. A	CHECKED BY: _____ 10/16/01 JIM WEEKS
Calculation Title: LDCC TRAPEZE DESIGN FOR 2-12" DIA AND 2-6" DIA PIPES	

INTRODUCTION	
Purpose	Provide a pipe hanger design for 2 - 12" and 2 - 6" diameter steel pipes. Provide calculations and details for the pipe hanger design.
Scope	Design a double trapeze hanger system with lateral seismic restraint. The double trapeze will provide the capacity for 2 - 6" pipes as part of a future project.
DESIGN BASIS	
Design Inputs	The LDCC facility is considered a Performance Category (PC) 1 facility. Piping and component weights provided by Mechanical Engineer and from manufacturers printed information. Per LANL Facility Mechanical Engineer, a future project may require a maximum of 2 - 6" diameter pipes be added to this trapeze system.
Criteria	LANL Facility Engineering Manual, Chapter 5 (Ref. 1) LANL Specification Section 13085, Seismic Protection (Ref. 2)
Assumptions	The capacity of the third floor framing system is adequate to carry the additional loads imposed by this piping project and future project needs - (Ref. 3442.053.SCAL.001).
REFERENCES	(1) LANL Facility Engineering Manual, Chapter 5 (2) LANL Specification Section 13085, Seismic Protection (3) ASCE 7-98 (4) AISC Manual of Steel Construction, 9th Edition (5) IBC 2000 (6) DOE-STD-1020-94 (7) 3442.053.SCAL.001
METHODS	Hand calculations were used to prepare these calculations.
RESULTS AND CONCLUSIONS	Design calculations and details have been provided to support piping for this project and future project needs.

Holmes & Narver | Raytheon

CALCULATION CHECKLIST

Task/Project #: 100256
Task Order 053
CCN CHILLED WATER SYSTEM OPTIMIZATION MASTER PLAN

Calculation Number: 3442.053.SCAL.002 3 of 44 | Revision A

Reviewer/Checker : JIM WEEKS

Reviewer performed or supervised subject calculation.
_____NO __Y__YES Justification Attachment _____, _____ pages

Alternate Verification method approved _____ Method _____

Date 10/15/01

ITEM(S) CHECKED	Accept Y/N	OBJECTIVE EVIDENCE Sheets		INITIAL/ DATE
1. Cover forms properly completed.	Y			10/15
2. Calculation Sheet headers complete with calc. no., rev., etc.	Y			10/15
3. Calculation Sheet contents complete per format.	Y			10/15
4. Listed attachments included.	Y			10/15
5. Calculation Objective clearly described.	Y			10/15
6. Criteria are suitable and properly referenced to task-specific documents.	Y			10/15
7. Assumptions and data described and attached or referenced to task documents.	Y			10/15
8. Calculation method identified and appropriate for the design activity.	Y			10/15
9. Calculation results reasonable and correctly described in Results and Conclusions.	Y			10/15
10. Computer Program identified with version and revision.	N/A			
11. Computer Program references method used, etc.	N/A			
12. Computer input/output provided.	N/A			
13. Computer run traceable to calculation.	N/A			
14. Computer input data within permissible design input range.	N/A			
15. Computer Program validation/verification addressed.	N/A			

REMARKS

Checker Print Name & Sign
JIM WEEKS

Date 10/15/01

Preparer Print Name & Sign
DAVID APPLE

Date 10-16-01

CHECKED [illegible] DATE 1/13

APPROVED [illegible] DATE 1/13

Holmes & Narver
ARCHITECTS - ENGINEERS
6501 Americas Parkway NE Suite 700
Albuquerque, NM 87110

JOB NO. 034103442.0053
3442.053. SCAL. 002 REV A.

SHEET 4 OF 44

TITLE LDCC Trapeze Design for 2-12" Dia. and 2-6" Dia. Pipes
CCIN CHILLED WATER SYSTEM OPTIMIZATION MASTER PLAN

BY DAA DATE 9-30-01

#100256

Tabulate Maximum hanger spacing: for pipe runs - (horizontal pipe runs) per plans - (SEE Sheet M29, ATTACHED)

6" ∅ 10' max. hanger spacing
12" ∅ 14' " " "

- Trapeze to support 2 ea 12" ∅ and 2 ea 6" ∅ pipe
- 3rd Floor framing to support run has W24x55 @ 7'-6" spacing (sheet S5, Lab Job 7050.3, attached)

∴ Provide hangers @ 7'-6" O.C.

Tabulate pipe & fitting weights: (Grinnell #170, pgs - Pipe Hanger Design & Engr. attached)

12" ∅ Sch 40: pipe = 53.53 plf water = 48.5 plf
2" insulation = 12.7 plf (1½" may be used. ok.)

$Wt_{12"} = w_{12} = 114.7$ plf ⇒ USE $w_{12} = 115$ plf

6" ∅ Sch 40: pipe = 18.97 plf water = 12.51 plf
2" insulation = 4.57 plf (1½" may be used. ok.)

$Wt_{6"} = w_6 = 36.05$ plf ⇒ USE $w_6 = 36$ plf

located at C-3:
- 12" ∅ Tee = 99 lbs
- 12" ∅ x 10" ∅ Reducer = 3.8 lbs
- (G) 10" ∅ Valve = 485
- (G) 10" ∅ Blind Flange = 77
- ✓ 10" ∅ 90° Elbow = 67.8 lbs + (V) Adapters #741 = 24.2 lbs x 2 = 48.4 lbs

(V) 12" ∅ Coupling STYLE 07 = 28.2 lbs

(V) 6" ∅ Coupling = 8.7 lbs

FORM 8X8

CHECKED [illegible] DATE 10/13

APPROVED [illegible] DATE 10/13

Holmes & Narver
ARCHITECTS - ENGINEERS
6501 Americas Parkway NE Suite 700
Albuquerque, NM 87110

JOB NO. 034103 442.0053
3442.053.SCAL.002 REV. A
SHEET 5 OF 44

TITLE LDCC Trapeze Design for 2 ea 12" dia. AND 2-6" dia Pipes BY DAA DATE 9-30-01
CCN CHILLED WATER SYSTEM OPTIMIZATION MASTER PLAN
#100256

Pipe & fitting weights - (cont.)

- ✓ 6" ϕ Tee = 27.3 lbs
- G 6" ϕ Valve = 190 lbs
- G 6" ϕ Blind flange = 29 lbs
- ✓ 6" ϕ 90° Elbow = 18.4 lbs
- ✓ Adapters # 741 for 6" = 10 lbs x 2 = 20 lbs

Consider: controlling case for pipe & fitting layout:

At Ⓒ-③ (sheet M9 planset for this job)

12" ϕ:

2 × 7.5' pipe	= 2 × 7.5 w_{12} = 2(7.5)(115)	= 1725 lbs
2 × tee	= 2 (99+48.4)	= 295 "
2 × 12" ϕ to 10" ϕ	= 2(38+48.4)	= 175 lbs
2 × 10" valves	= 2(485)	= 970 lbs
2 × 10" Blind Flg.	= 2(77)	= 155 lbs
	Σ12" ϕ =	3320 lbs

6" ϕ:

2 × 7.5' pipe	= 2(7.5) w_6 = 2(7.5)(36)	= 540 lbs
2 × tee	= 2(27.3+20)	= 95 lbs
2 × valve	= 2(190)	= 380 lbs
2 × Blind Flg.	= 2(29)	= 60 lbs
	Σ6" ϕ =	1075 lbs

TOTAL Vertical load max per hanger = 4400 lbs
plus hanger self-weight.

SAY W_p = 5000 lbs for seismic design

FORM 8X8

CHECKED _____ DATE 1/13

APPROVED _____ DATE 1/13

Holmes & Narver
ARCHITECTS - ENGINEERS
6501 Americas Parkway NE Suite 700
Albuquerque, NM 87110

JOB NO. 03410344 2.0053
3442.053-SCAL.002 REV. A
SHEET 6 OF 44

TITLE LDCC Trapeze Design For 2-12" dia AND 2-6" dia. Pipes
CCN CHILLED WATER SYSTEM OPTIMIZATION MASTER PLAN
BY UAA DATE 9-30-01

#100256

16. FRAMING MEMBER, EXISTING.

17. BEAM CLAMP
fig 292, pg 28, Catalog PH-98 Cathedral.
Field verify size reqd. for each location.

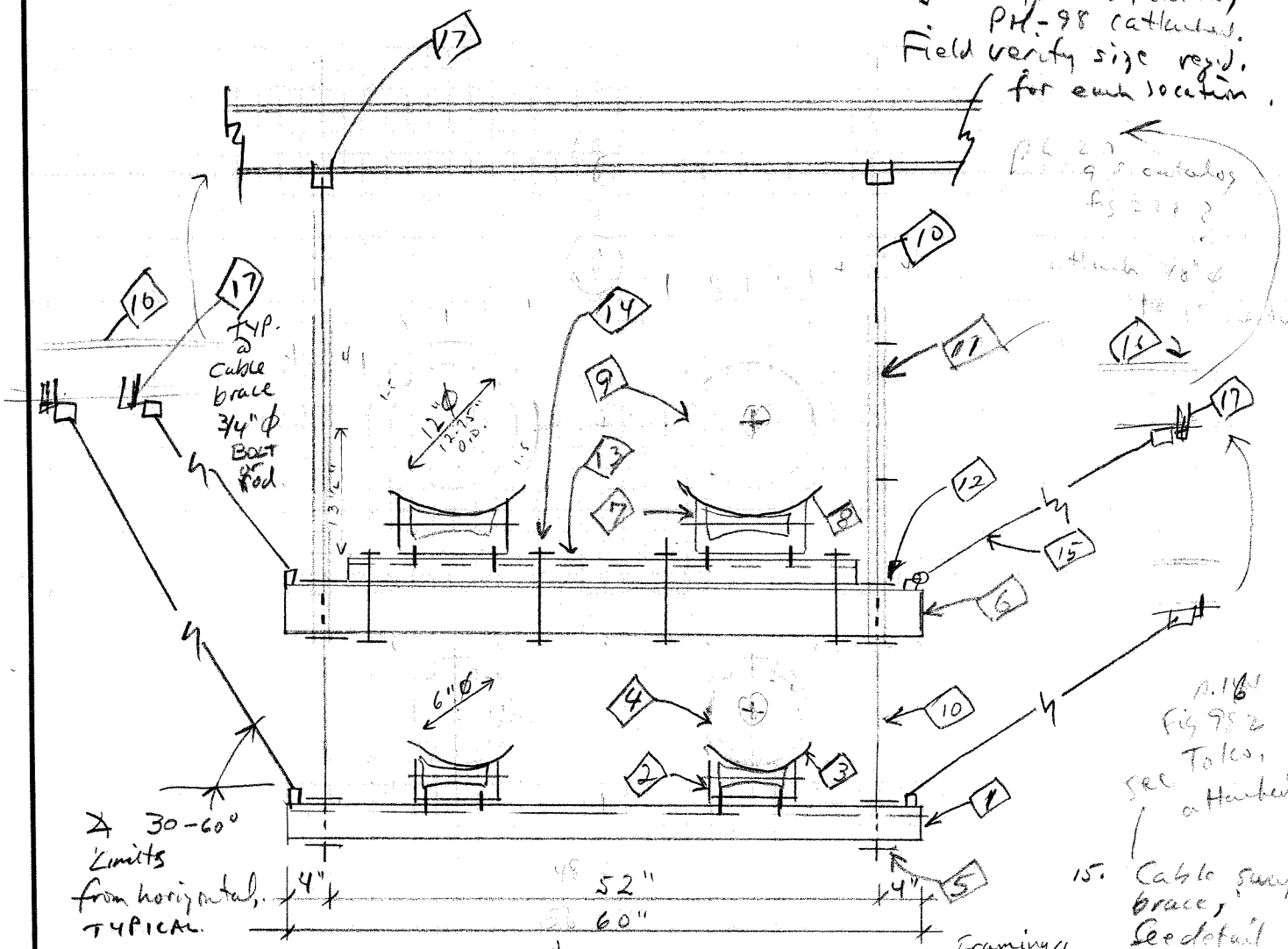

1. P5000 Channel, bevel cut edges smooth.
2. fig. 271, 10", attach per manufacturer recommendation.
3. fig 167, 6", 11B
4. 6" sch. 40 steel pipe w/ 1½" insulation. See Mechanical sheets for information.
5. Washer, nut, typical each end, each side of horizontal member.
6. TS 4x4x3/8", bevel cut edges smooth.
7. fig. 271, 16", attach per manuf. recommendation
8. fig. 167, 12", 15C, INSULATION SHIELDS
9. 12" Ø sch. 40 steel pipe w/ 1½" insulation. See Mechanical sheets for information.
10. 7/8" Ø ASTM A36 threaded rod.
11. Rod Stiffener for 7/8" Ø rod
12. Washer, nut, typical each end each side of horizontal member.
13. P1000 Framing Channel, ___, sheet ___
14. 1/2" Ø Bolt, typ. of 4, 3 EQ. SPACES.
15. Cable sway brace, See detail ___, sheet ___

FORM 8X8

CHECKED ____ DATE 10/15/01

APPROVED ____ DATE 10/15/01

Holmes & Narver
ARCHITECTS - ENGINEERS
6501 Americas Parkway NE Suite 700
Albuquerque, NM 87110

JOB NO. 03410 3442.005-3
3442.053.SCAL.002 REV. A
SHEET 7 OF 44

TITLE 2 DCC TRAPEZE DESIGN FOR 2-12" DIA. AND 2-6" DIA PIPES BY DAA DATE 9-30-01
CEN CHILLED WATER SYSTEM OPTIMIZATION MASTER PLAN
#100256

Check TS 4x4x3/8" CAPACITY TO HOLD 2~12" DIA PIPES.

$S_x = 5.35 \text{ in}^3$

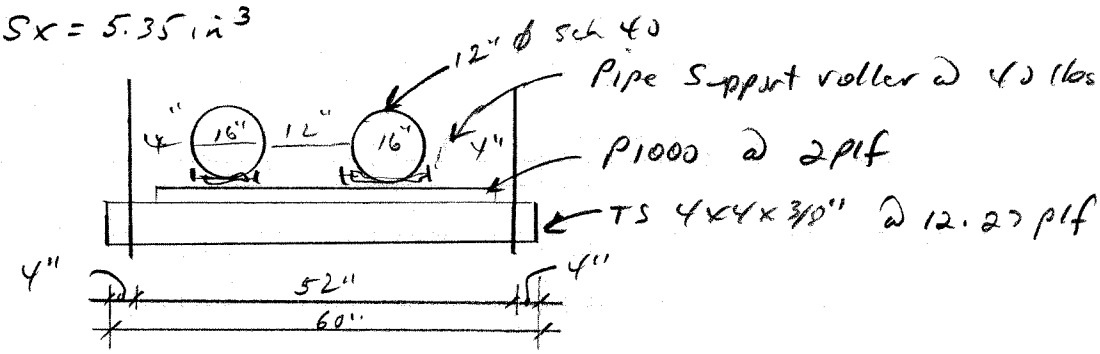

uniform $w_u = (12.27 + 2)\text{ plf} = 14.27 \text{ plf}$, USE $w_u = 15 \text{ plf}$

Conc. $W_c = 3320 \text{ lbs} + 2(40 \text{ lbs}) = 3400 \text{ lbs}$
(p.5 calcs) 2 pipe rollers

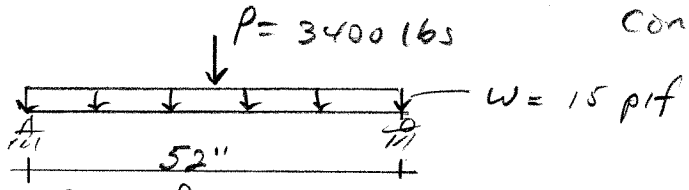

Conservative to put total load at ℄ span

$M_{max} = wl^2/8 + PL/4$

$= \left[\frac{(15\text{ plf})(52/12)^2}{8} + \frac{(3400\text{ lbs})(52/12)}{4}\right] \text{ lb.ft}$

$M_{max} = 3.718 \text{ K-ft} = 44.6 \text{ K-inch}$

$f_b = M/S = 44.6/5.35 \ \frac{\text{K-in}}{\text{in}^3}$

$f_b = 8.34 \text{ ksi}$

TS = 46 ksi steel

$F_b = 0.66 F_y = 0.66(46 \text{ ksi})$

$F_b = 30.36 \text{ ksi}$

$(f_b = 8.34 \text{ ksi}) \leq (F_b = 30.36 \text{ ksi}) \Rightarrow$ OK ✓

FORM 8X8

CHECKED [illegible] DATE 10/13

APPROVED [illegible] DATE 10/13

Holmes & Narver
ARCHITECTS - ENGINEERS
6501 Americas Parkway NE Suite 700
Albuquerque, NM 87110

JOB NO. 034103442.0053
3442.053.SCAL.002 REV-A
SHEET 8 OF 44

TITLE LDCC Trapeze Design For 2-12" Dia AND 2-6" Dia. Pipes
CCN CHILLED WATER SYSTEM OPTIMIZATION MASTER PLAN
BY DAA DATE 9-30-01

#100256

Calculate seismic forces: Ref. LANL Eng. Manual, Ch.5

$F_p = a_p C_a I_p W_p [1 + 3(h_x/h_r)] / R_p$ (202-5)

$C_a = 0.28$ ✓
$I_p = 1.0$ ✓ } Table 202.1B

$W_p = 5000$ lbs (p.5, these calcs)

$a_p = 1.0$ ✓
$R_p = 3.0$ ✓ } Eqpt., item 2, Table 202.3

$h_x = 35$ ft
$h_r = 53$ ft } (A 3.1, building plans, attached)

$F_p = (1.0)(0.28)(1.0)(5.0 \text{ kips})[1 + 3(35/53)] / 3.0$

$F_p = 1.4^k$ ✓

$0.7 \le [a_p[1 + 3(h_x/h_r)]/R_p = 1.0] \le 4.0$ OK

Lateral brace @ this hanger - other hangers w/o tee's or valves can be braced @ 15' spacings or every other hanger.

∴ Brace this hanger for $F_p = 1.4^k$, and brace adjacent hangers for 15 ft. spacing loading.

NOTE: THIS EFFORT ONLY CONSIDERS THE DESIGN AND ANALYSIS OF THE PIPE HANGERS ONLY. THE ANALYSIS AND DESIGN TO ACCOMMODATE THE SEISMIC FORCES AND RESPONSE OF THE ENTIRE PIPING RUN IS BEYOND THE SCOPE OF THIS PROJECT. LIKEWISE, THE PIPING SYSTEM'S RESPONSE TO A WATER HAMMER EFFECT IS BEYOND THIS SCOPE. THIS ANALYSIS AND DESIGN CONSIDERS LATERAL, SEISMIC RESPONSE OF THE PIPE HANGERS BEING DESIGNED ONLY

FORM 8X8

CHECKED [illegible] DATE 10/13

APPROVED [illegible] DATE 10/13

Holmes & Narver
ARCHITECTS - ENGINEERS
6501 Americas Parkway NE Suite 700
Albuquerque, NM 87110

JOB NO. 03 4/10 3 442.0053
3442.053-SCAL.002 REV. A
SHEET 9 OF 44

TITLE LDCC Trapeze Design For 2-12" Dia. And 2-6" Dia. Pipes BY DAA DATE 9-30-01
CCN CHILLED WATER SYSTEM OPTIMIZATION MASTER PLAN
#100256

Look at brace loads for 30°, 45°, 60° angles:

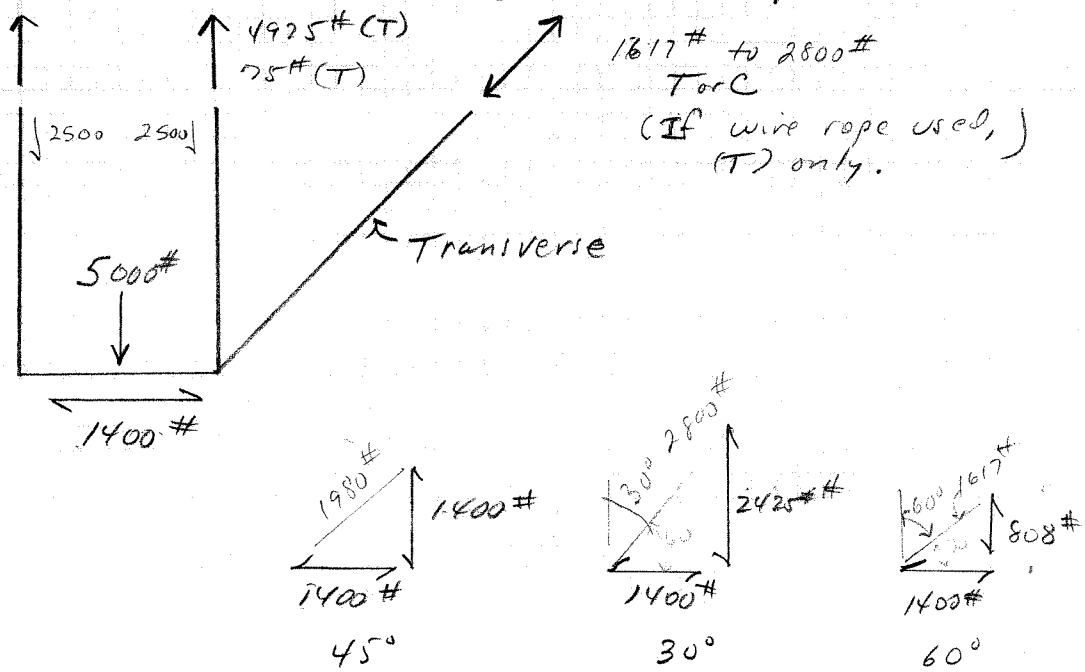

Tolco Fig. 982 - Cable Sway Brace Attachment (attached)

1/4" ϕ Cable ⇒ Max Load = 2589 lbs.

∴ Use Fig. 982 w/ angle ∠ ≤ 45° max (from horiz.)

(Tactual = 1980#) ≤ (Tallowable = 2589#) OK. ✓

Brace hanger @ locations shown on plans:
@ location adjacent to tee & valves
and at adjacent hangers.

FORM 8X8

CHECKED [illegible] DATE 1213

APPROVED [illegible] DATE 1213

Holmes & Narver
ARCHITECTS - ENGINEERS
6501 Americas Parkway NE Suite 700
Albuquerque, NM 87110

JOB NO. 034103442.0053
3442.053-SCAL-002 REV. A
SHEET 70 OF 44

TITLE LDCC Trapeze Design For 2-12" Dia. AND 2-6" Dia. Pipes
CCN CHILLED WATER SYSTEM OPTIMIZATION MASTER PLAN
BY DAA DATE 9-30-01

#100256

Consider additional case for pipe & fittings layout:

2 ~ 12" Pipe x 7'-6" = 2(7.5) W_{12} = 2(7.5)(115) = 1725 lbs
4 ~ 12" couplings STYLE 07 = 4(28.2) = 115 "
2 ~ 12" Ø to 10" Ø reducers = 2(38 + 24.2 + 46.8) = 220 "
2 ~ 12" Ø 90° elbow + adapters = 2(74 + 46.8(2)) = 275 #

2 ~ 6" Pipe x 7'-6" = 2(7.5)(W_6) = 2(7.5)(36 plf) = 540 #
4 ~ 6" couplings style 07 = 4(9.2) = 40 #
2 ~ 6" 90° elbow + adapters = 2(18.8 + 2(10)) = 80 #

2995 lbs

Total vertical load max per hanger = 3000 lbs
plus hanger self-weight.
Say Wp = 3200 lbs for design, seismic design.

By inspection for wp = 3200 lbs, use same sway brace as for wp = 5000 lbs - (see p.5 these calcs)

Use Fig. 982 Tolco Cable Sway Brace Attachment.

∴ Use same detail for this condition as shown on p.6 these calcs.

FORM 8X8

11

Holmes & Narver
Architects – Engineers
6501 Americas Parkway NE Suite 700
Albuquerque, NM 87110

CHECKED DATE 10/15/01 JOB NO. 3442.053.SCAL.002
Rev. A

APPROVED DATE 10/15/01 SHEET 1 OF 34

BY DAA DATE 10-15-01

TITLE LDCC Trapeze Design for 2-12" Dia. Pipes and 2-6" Dia. Pipes
#100256 CHILLED WATER SYSTEM OPTIMIZATION MASTER PLAN

APPENDIX

Drawing No. C52952, Sheet M8	1 page
Drawing No. C52952, Sheet M9	1 page
Drawing No. C52952, Sheet M15	1 page
Drawing No. C52952, Sheet M29	1 page
Lab Job 7050-3, Eng-C-45225, LDCC Sheet A3.1	1 page
AISC ASD 9th Edition, p. 1-96, Structural Tubing, Square	1 page
Victalic Pipe and Fitting Data Sheets	6 ~~4~~ pages DAA 10-05-01
Grinnell Pipe Hanger Design and Engineering Publication	2 pages
Grinnell Pipe Hangers	7 pages
Tolco Incorporated Catalog Cut Sheets	4 pages
Unistrut Catalog No. 10R	8 pages

12

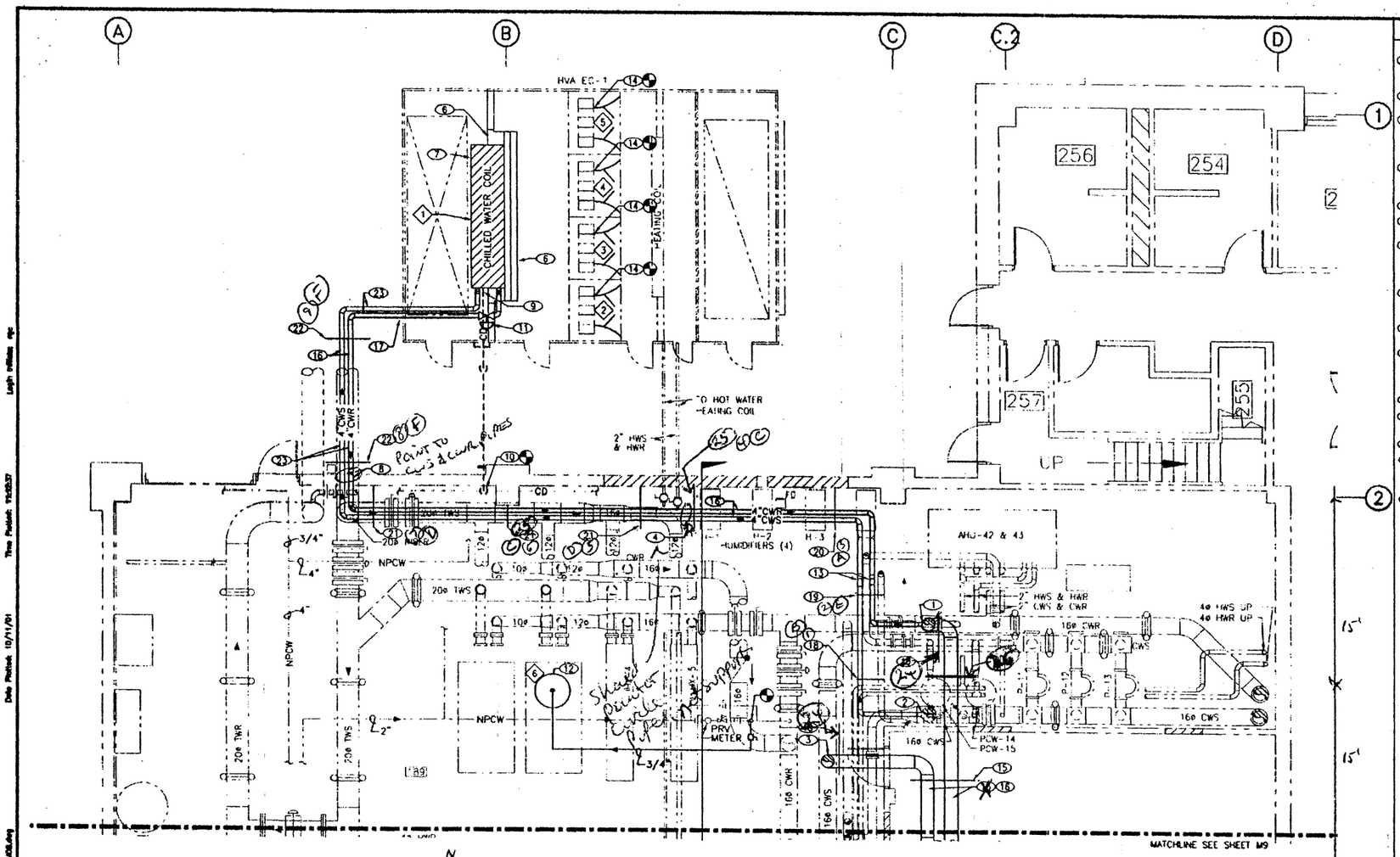

CHILLED WATER PIPING AND HVAC PLAN – AREA A
SCALE: 1/4"=1'-0"

KEYED NOTES

1. SEE DETAIL 3/M17 FOR CWR CONNECTION DETAIL.
2. SEE DETAIL 4/M17 FOR CWS CONNECTION DETAIL.
3. HOT TAP THE CWS WITH A 12"ø. INSTALL A 12"ø VALVE AND EXTEND CWS PIPING AS SHOWN. SEE DETAIL 5/M17. MEZZANINE FRAMING
4. ROUTE CWS AND CWR PIPING UP ON TOP OF STRUCTURE. SEE DETAIL 2/M16.
5. NOT USED
6. INSTALL 14GA. SHEET METAL BLANK DOWN STREAM OF INACTIVE PORTION OF COIL FACE DAMPERS.
7. INSTALL CHILLED WATER COILAND COIL CASING. SEE DETAIL 1/M17 AND 2/M17 FOR PROCEDURE.
8. CORE DRILL AND SLEEVE 4"ø CHILLED WATER SUPPLY AND RETURN PIPING THROUGH WALL. SEAL OPENING WITH LINK SEAL OR EQUIVALENT. INSTALL ESCUTIONS ON BOTH SIDES OF WALL FOR EACH PIPE.
9. ROUTE 1-1/2" CONDENSATE DRAIN FROM COIL BRANCH AND SUMP PUMP UP TO BOTTOM OF PIPE 10'-0".
10. ROUTE CONDENSATE DRAIN UP 65" ABOVE GRADE. SLOPE DRAIN PIPE TOWARD BUILDING. SLEEVE PIPE THROUGH WALL. SEAL WALL PENETRATION WITH LINK SEAL. DROP CONDENSATE DRAIN PIPING DOWN AND CONNECT TO EXISTING 1-1/2"ø DRAIN PIPE.
11. INSTALL MODULATING TWO WAY CONTROL VALVE. SEE CONTROL DRAWINGS.
12. INSTALL CHILLED WATER EXPANSION TANK ON EXISTING CONCRETE PAD AND ANCHOR IN PLACE. SET PRESSURE AT 25 PSIG.
13. DROP PIPE DOWN TO WITHIN 12" OF TOP OF MEZZANINE LATTICE.
14. INSTALL NEW INLET CONE WITH INLET VANE DAMPERS. INSTALL IN ACCORDANCE WITH THE MANUFACTURERS INSTRUCTIONS. FURNISH AND INSTALL PNEUMATIC ADAPTER WITH EACH DAMPER.
15. SEE STRUCTURAL DETAIL 4/M15 FOR PIPE SUPPORT AND SEISMIC RESTRAINT REQUIREMENTS.

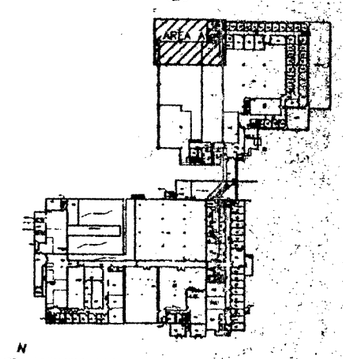

KEYPLAN
SCALE: NONE

NOT FOR CONSTRUCTION

KEYED NOTES (CONT.)

16. INSULATE PIPING. SEE SPECIFICATIONS.
17. SUPPORT PIPING AT WALL OF UNIT EC-1 USING P-1000 UNISTRUT AND CLAMPS. SEAL PIPE PENETRATIONS WITH EXTERIOR TYPE CAULKING.
18. SUPPORT PIPING ~~AT WALL~~. SEE STRUCTURAL DETAIL 1/M16 (B) FROM EXISTING STRUCTURE
19. SUPPORT PIPING ~~AT WALL~~. SEE STRUCTURAL DETAIL 4/M16 (E) FROM EXISTING STRUCTURE
20. SUPPORT PIPING ~~AT WALL~~. SEE STRUCTURAL DETAIL 2/M15 (A) BACK AS IT WAS
21. SUPPORT PIPING ~~AT WALL~~. SEE STRUCTURAL DETAIL 3/M16 (D)
22. SUPPORT PIPING ~~AT WALL~~. SEE STRUCTURAL DETAIL 5/M16 (C) FROM EXISTING PIPE BRIDGE STRUCTURE
23. INSTALL HEAT CABLE ON EXTERIOR CWR AND CWS CHILLED WATER PIPING. COORDINATE WITH DIVISION 16.
24. SEE STRUCTURAL DETAIL 5/M15 FOR PIPE SUPPORT AND SEISMIC RESTRAINT REQUIREMENTS
25. SUPPORT PIPING FROM EXISTING STRUCTURE. SEE STRUCTURAL DETAIL 2/M16 (C)
26. SEE NOTE 15 except provide only 4 pipe stand for 12" DIA PIPE.

0' 1' 2' 4' 6' 8'
1/4"=1'-0"

ENGINEER'S SEAL

REV	DATE	CLASS REV	REVISIONS				
B	10/5/01		90% "IN-HOUSE REVIEW"	RC	MS	DD	
A	9/18/01		60% "IN-HOUSE REVIEW"	RC	MS	DD	

HOLMES & NARVER/RAYTHEON (HNR)
HOLMES & NARVER/RAYTHEON ENGINEERS & CONSTRUCTORS
CHAMPS-CENTRIS CONSULTING ENGINEERS
DUNLAP & FRASER CONSULTING ENGINEERS

CCN CHILLED WATER SYSTEM OPTIMIZATION MASTER PLAN
MECH: CHILLED WATER PIPING AND HVAC PLAN – AREA A

BLDG. 1498 & 132 TA-3

SUBMITTED DWIGHT DORSEY
APPROVED FOR RELEASE DOUGLAS MERRILL

Los Alamos
Los Alamos National Laboratory
Los Alamos, New Mexico 87545

SHEET M8

PROJECT ID 100256
DRAWING NO. C52952 REV. B

Date Plotted: 10/11/01
Cad File Name: 100256M08.dwg
Cad File Path: H:\C52952.DR\cad\dwgs\
Leigh Williams rpc

13

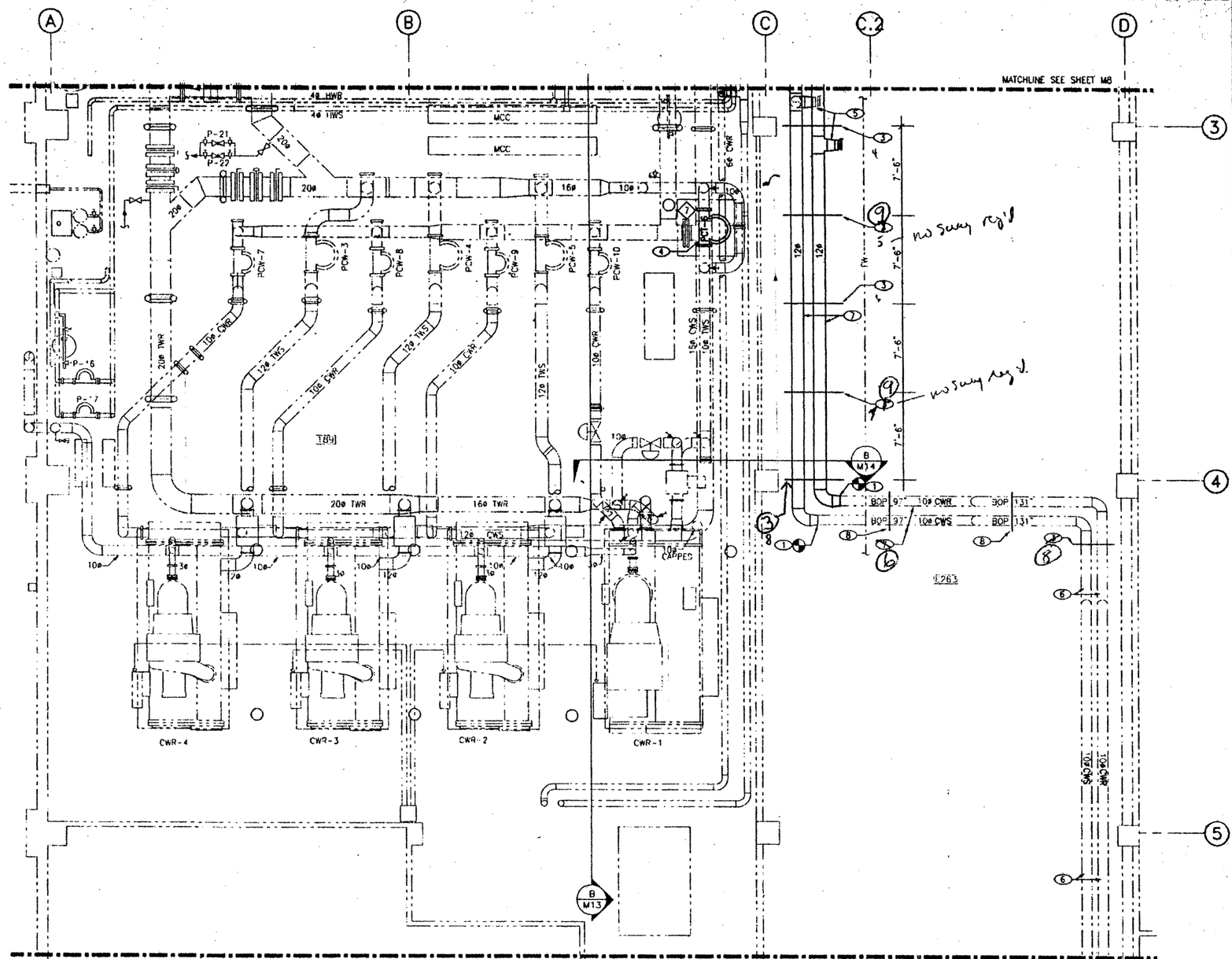

CHILLED WATER PIPING PLAN – AREA B
SCALE: 1/4"=1'-0"

GENERAL NOTES

1. ALL PIPE FLANGES SHOULD BE INSTALLED 12" FROM THE CENTER LINE OF PIPE HANGER TO ALLOW ROOM FOR PIPE MOVEMENT.

KEYED NOTES

1. CONNECT CHILLED WATER SUPPLY PIPING TO THE CURRENT TOWER WATER RETURN PIPING.
2. CONNECT CHILLED WATER RETURN PIPING TO THE CURRENT TOWER WATER SUPPLY PIPING.
3. SUPPORT AND SEISMICALLY BRACE NEW CHILLED WATER PIPING. SEE STRUCTURAL DETAIL 4/M15.
4. INSTALL TOWER WATER PUMP 7 PCT-6.
5. PROVIDE 12"ø TEE WITH 12"ø"x10ø" REDUCER AND 8"ø VALVE FOR FUTURE. INSTALL 8"ø BLIND FLANGE. MAINTAIN A MINIMUM OF 12" CLEARANCE BETWEEN TEE FITTING TO CENTER LINE OF PIPE SUPPORT TO ALLOW FOR PIPE MOVEMENT.
6. INSULATE CONVERTED TOWER WATER PIPING TO CHILLED WATER PIPING. SEE SPECIFICATIONS. ADJUST AND/OR REPLACE PIPE HANGER SADDLES TO FIT AROUND PIPE AND INSULATION. TEMPORARILY SUPPORT PIPE FROM MEZZANINE FLOOR WHILE ADJUSTING HANGERS.
7. INSULATE PIPING. SEE SPECIFICATIONS.
8. SUPPORT AND SEISMICALLY BRACE NEW CHILLED WATER PIPING. SEE STRUCTURAL DETAIL 5/M15. EXISTING PIPE HANGERS
9. SEE NOTE 3, except delete seismic bracing at this location

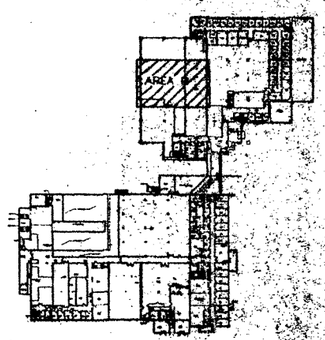

KEYPLAN
SCALE: NONE

NOT FOR CONSTRUCTION

REV	DATE		DESCRIPTION				
B	10/5/01		90% "IN-HOUSE REVIEW"	RC	DS	DD	
A	9/18/01		60% "IN-HOUSE REVIEW"	RC	MS	DD	
REV.	DATE	QUOT. REQ.	REMARKS	DR	KS	CHKD	SUB

HOLMES & NARVER/RAYTHEON (HNR)

CCN CHILLED WATER SYSTEM OPTIMIZATION MASTER PLAN

MECH: CHILLED WATER PIPING PLAN – AREA B

BLDG. 1498 & 132 — TA-3

DWIGHT DORSEY

Los Alamos

SHEET M9

PROJECT ID 100256

DRAWING NO. C52952

ENGINEER'S SEAL

1/4"=1'-0"

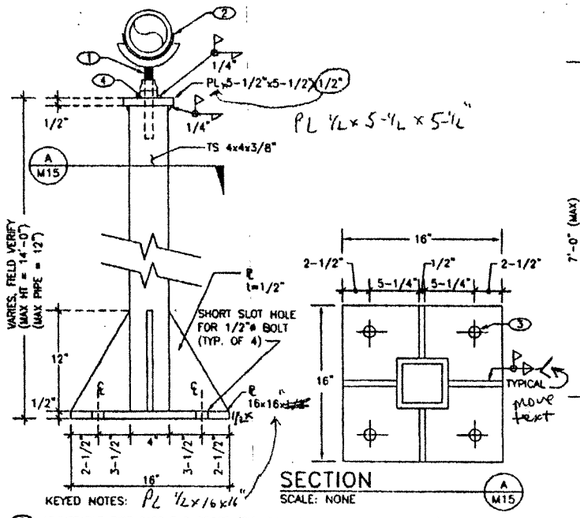

KEYED NOTES:

1. ADJUSTABLE PIPE SADDLE SUPPORT (FIG. 264, GRINNELL CATALOG PH-99). SIZE PER PIPE DIAMETER AND INSULATION THICKNESS, SPECIFIED ELSEWHERE.
2. INSULATION SHIELD. SIZE PER PIPE DIAMETER AND INSULATION THICKNESS SPECIFIED ELSEWHERE.
3. MOUNT USING HILTI HSL M 12/50 HEAVY-DUTY EXPANSION ANCHOR (ITEM NO. 00066593, HILTI 2001 CATALOG). INSTALL PER MANUFACTURERS RECOMMENDATIONS.
4. DRILL HOLE IN CENTER OF PLATE TO ALLOW VERTICAL SUPPORT MOVEMENT.

PIPE SUPPORT – FLOOR MOUNTED

SCALE: NONE

(1/M10)

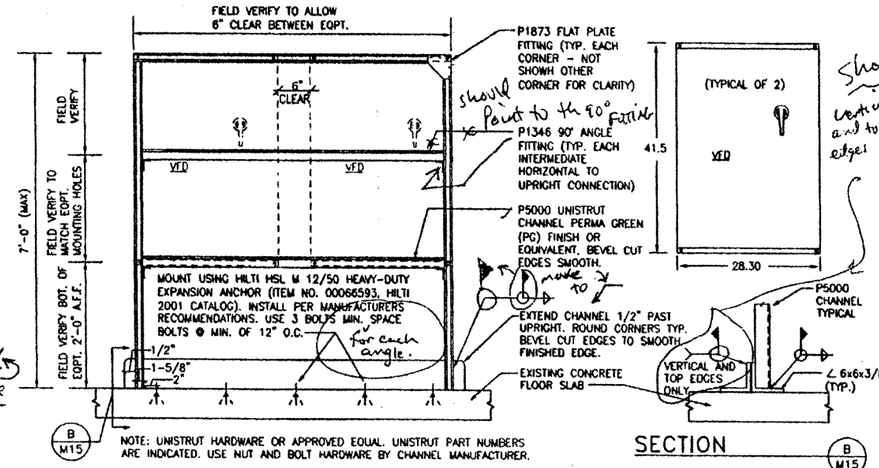

NOTE: UNISTRUT HARDWARE OR APPROVED EQUAL. UNISTRUT PART NUMBERS ARE INDICATED. USE NUT AND BOLT HARDWARE BY CHANNEL MANUFACTURER.

VFD SUPPORT STAND

SCALE: NONE

(3/M10) (3/M14)

SECTION

(B/M15)

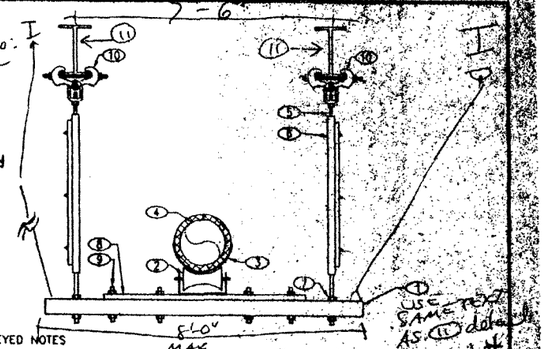

KEYED NOTES

1. P5000 UNISTRUT CHANNEL OR EQUIVALENT, BEVEL CUT EDGES SMOOTH.
2. 16" PIPE ROLL STAND, ATTACHED PER MANUFACTURERS RECOMMENDATION.
3. 1/2" INSULATION PROTECTION ~~SHIELD~~
4. 12"ø SCH 40 STEEL PIPE WITH 1-1/2" INSULATION. SEE SPECIFICATIONS.
5. 7/8"ø ASTM ALL THREADED ROD.
6. ROD STIFFNER FOR 7/8"ø ROD.
7. WASHER, NUT, TYPICAL EACH END EACH SIDE OF HORIZONTAL MEMBER.
8. P1000 UNISTRUT
9. 1/2"ø BOLT, TYP. OF 4
10. BEAM CLAMP

USE SAME TEXT AS (16) detail 4

(11) EXISTING 3rd Level FRAMING.

(1) TS 4x4x3/8". Bevel cut edges smooth.

PIPE HANGER SUPPORT

SCALE: NONE

(5/M8)

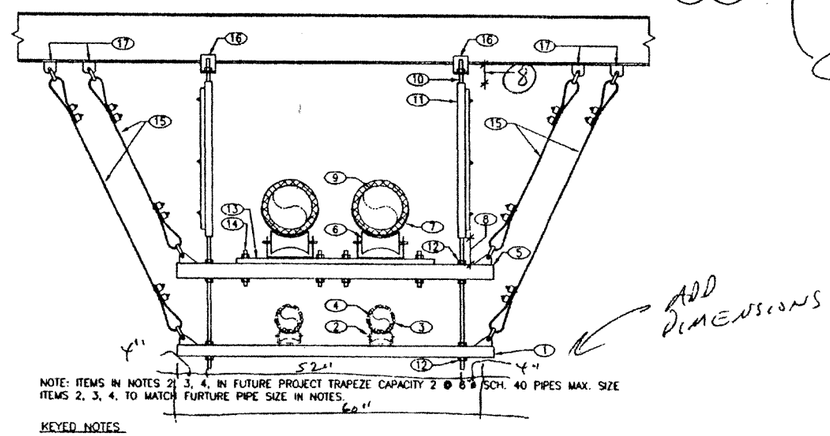

NOTE: ITEMS IN NOTES 2, 3, 4, IN FUTURE PROJECT TRAPEZE CAPACITY 2 @ 8"ø SCH. 40 PIPES MAX. SIZE ITEMS 2, 3, 4, TO MATCH FURTURE PIPE SIZE IN NOTES.

KEYED NOTES

1. P5000 UNISTRUT CHANNEL PERMA GREEN (PG) FINISH OR EQUIVALENT, BEVEL CUT EDGES SMOOTH.
2. 16"ø PIPE ROLL STAND. SEE GRINNELL FIG. 271, (OR APPROVED EQUAL) ATTACH PER MANUFACTURERS RECOMMENDATIONS. N.I.C. (FUTURE)
3. PROTECTION SADDLE N.I.C. (FUTURE)
4. 6"ø SCH 40 STEEL PIPE WITH 1-1/2" INSULATION. SEE SPECIFICATIONS. N.I.C. (FUTURE)
5. TS 4x4x3/8", BEVEL CUT EDGES SMOOTH.
6. 16" PIPE ROLL STAND. SEE GRINNELL FIG. 271 (OR APPROVED EQUAL). ATTACH PER MANUFACTURERS RECOMMENDATIONS.
7. 16" INSULATION PROTECTION SADDLE.
8. 6" MAXIMUM, TYPICAL
9. 12"ø SCH 40 STEEL PIPE WITH 1-1/2" INSULATION. SEE SPECIFICATIONS.
10. 7/8"ø ASTM A36 ALL THREADED ROD.
11. ROD STIFFNER FOR 7/8"ø ROD. SECURE WITH 2 BOLTS MIN., 12" O.C. MAX. (TOLCO FIG. 98 OR APPROVED EQUAL).
12. WASHER, NUT, TYPICAL EACH END EACH SIDE OF HORIZONTAL MEMBER.
13. P1000 (UNISTRUT OR APPROVED EQUAL)
14. 1/2"ø BOLT, NUT, LOCK WASHER, TYP. OF 4
15. CABLE SWAY BRACE ASSEMBLY. USE 1/4" DIA. GALVANIZED 7x19 CORE STRAND AIRCRAFT CABLE. USE CLAMPS TO FULLY DEVELOP CABLE STRENGTH. ATTACH TO TRAPEZE WITH TOLCO FIG. 982. CABLE SWAY BRACE ATTACHMENT, OR APPROVED EQUAL. THRU BOLT TO TRAPEEZE AND MECHANICALLY ATTACH TO 7/8"ø ROD USING A 1/4" THICK PLATE.
16. BEAM CLAMP, GRINNELL FIG. 292 OR APPROVED EQUAL. VERIFY SIZE OF SUPPORT BEAM FLANGE.
17. USE WELDING LUG, TOLCO FIG. 343 OR APPROVED EQUAL. CONNECT SWAY BRACE ATTACHMENT WITH 3/4" DIA. BOLT, WASHER, DOUBLE NUT.

PIPE HANGER – DOUBLE TRAPEZE

SCALE: NONE

(4/M8) (4/M9)

ADD SWAY BRACING to DETAIL 5

USE (4/M8) components & call outs w/ correct keynote #'s

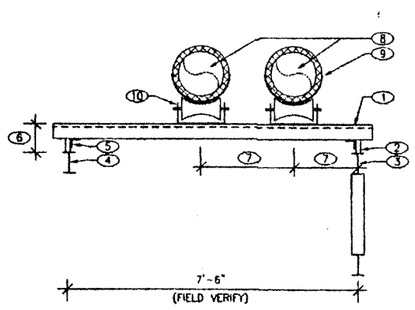

1. P5000 UNISTRUT (OR APPROVED EQUAL).
2. POST BASE P2072A UNISTRUT (OR APPROVED EQUAL), TYPICAL. ANCHOR TO SUPPORT MEMBER PER MANUFACTURERS RECOMMENDATIONS.
3. BT-4 TRUSS EXISTING. DRYWALL COVERING MEMBER, NOT SHOWN.
4. W 8x28 MEZZANINE FRAMING MEMBER. DRYWALL COVERING MEMBER, NOT SHOWN.
5. P1000 UNISTRUT POST AND P1325 90° FITTING, TYPICAL
6. ADJUST LENGTH OF P1000 UNISTRUT POST TO PROVIDE 12 INCHES FOR THIS DIMENSION.
7. FIELD VERIFY.
8. 4" DIA. SCH. 40 STEEL PIPE AND INSULATION.
9. INSULATION PROTECTION SADDLE TYPICAL.
10. PIPE ROLL STAND, GRINNELL FIG. 271 OR APPROVAL EQUAL. SIZE AND MOUNT PER MANUFACTURERS RECOMMENDATIONS.

PIPE SUPPORT

SCALE: NONE

FOR 2-4" DIA. PIPES

(2/M8)

NOT FOR CONSTRUCTION

REV	DATE	CLASS REV	REVISIONS	DRN	DES	CHKD	SUP	APP
B	10/5/01		90% "IN-HOUSE REVIEW"	RC	MS	BD		
A	9/18/01		60% "IN-HOUSE REVIEW"	RC	MS	BD		

HOLMES & NARVER/RAYTHEON (HNR)

HOLMES & NARVER/RAYTHEON ENGINEERS & CONSTRUCTORS
CHAVES-GRAYSON CONSULTING ENGINEERS
BURGESS & NIXON CONSULTING ENGINEERS

CCN CHILLED WATER SYSTEM OPTIMIZATION MASTER PLAN

MECH: DETAILS

BLDG. 1498 & 132 TA-3

SUBMITTED: DWIGHT DORSEY

APPROVED FOR RELEASE: BOBBY HEFLEY

Los Alamos — Los Alamos National Laboratory, Los Alamos, New Mexico 87545

SHEET: M15

PROJECT ID: 100256

DRAWING NO.: C52952

REV: B

ENGINEER'S SEAL

MECHANICAL SPECIFICATIONS

301 Mechanical Notes

301.1 GENERAL PROVISIONS

1. FURNISH EQUIPMENT AND MATERIALS SHOWN ON THE DRAWINGS, SPECIFIED HEREIN, AND REQUIRED TO PROVIDE A COMPLETE OPERATING SYSTEM.
2. VERIFY AND ESTABLISH DIMENSIONS, CLEARANCES, AND FIELD CONDITIONS PRIOR TO THE START OF FABRICATION AND/OR INSTALLATION. COORDINATE THE INSTALLATION WITH TRADES INVOLVED ON THE PROJECT.
3. THE DRAWINGS SHOW THE GENERAL ARRANGEMENT OF SYSTEMS. IF CONDITIONS REQUIRE THE REARRANGEMENT OF ANY SYSTEM, SUBMIT DEPARTURES FROM DRAWINGS WITH REASONS TO THE CONSTRUCTION INSPECTOR FOR APPROVAL BEFORE MAKING ANY CHANGES.
4. CLOSE OPEN ENDS OF WORK AND EQUIPMENT WITH TEMPORARY COVERS OR PLUGS DURING STORAGE AND CONSTRUCTION TO PREVENT ENTRY OF OBSTRUCTING MATERIALS. PRIOR TO START-UP OF SYSTEMS, CHECK TO SEE THAT TEMPORARY COVERS HAVE BEEN REMOVED.
5. USE NEW MATERIALS AND EQUIPMENT UNLESS OTHERWISE SPECIFIED AND INSTALL IN ACCORDANCE WITH THE MANUFACTURER'S RECOMMENDATIONS.
6. IN THE EVENT ASBESTOS IS ENCOUNTERED OR SUSPECTED TO BE PRESENT, CEASE WORK IN THE IMMEDIATE AREA AND NOTIFY THE CONSTRUCTION INSPECTOR. REMOVE, HANDLE, AND DISPOSE OF ASBESTOS IN ACCORDANCE WITH LANL POLICY. THE CONSTRUCTION INSPECTOR WILL CONTACT ESH-5 BEFORE ANY REMOVAL OF ASBESTOS.
7. INSTALLATIONS SHALL CONFORM TO THE LATEST EDITION OF THE UNIFORM PLUMBING CODE AND THE UNIFORM MECHANICAL CODE.
8. "OR APPROVED EQUAL" IS ALWAYS IMPLIED AFTER A BRAND NAME, PATENTED PROCESS OR CATALOG NUMBER. THE CONTRACTOR MAY SUBSTITUTE ANY BRAND OR PROCESS APPROVED AS AN EQUAL BY THE SPECIFYING ARCHITECT/ENGINEER. THE ONLY EXCEPTION IS WHERE "NO SUBSTITUTION" IS SPECIFIED.

301.1.1 SUBMITTALS

PROVIDE THE SUBMITTAL TYPE FOR EACH ITEM AS LISTED BELOW:

1.
- CA =CALCULATIONS
- CD =CATALOG DATA
- CT =CERTIFICATIONS
- II =INSTALLATION INSTRUCTIONS
- ML =MATERIALS/PARTS LIST/DESIGN MIXES
- PD =PERFORMANCE DATA - CURVES
- SC =SAMPLES/COLORS
- SD =SHOP DRAWINGS
- TR =TEST REPORTS
- WD =WIRING DIAGRAMS
- OM =OPERATIONS AND MAINTENCANCE DATA
- RD =PROJECT RECORD DOCUMENTS
- SP =SPARE PARTS AND MAINTENANCE
- WA =WARRANTIES

SUBMITTAL NO.	DESCRIPTION	SUBMITTAL TYPE													
		CA	CD	CT	II	ML	PD	SC	SD	TR	WD	OM	RD	SP	WA
M1	PIPE MATERIALS		X												
M2	PIPE SPECIALTIES		X												
M3	GAUGES		X									X			X
M4	MECH. IDENTIFICATION		X												
M5	SEISMIC PROTECTION		X												
M6	MECH. INSULATION		X												
M7	PIPE SUP. & HANGERS		X												
M8	PRESSURE TESTS			X											
M9	VALVES		X									X		X	X
M10	VIBRATION ISOLATION		X												
M11	TEST AND BALANCE			X											
M12	FIRE STOP SYSTEMS		X	X					X	X					
M13	AS-BUILTS												X		
M14	EXPANSION TANK		X									X			X
M15	VARIABLE FREQUENCY DRIVES		X								X	X			X
M16	PUMP IMPELLERS		X		X	X									X
M17	CHILLED WATER COIL CASING STRUCTURAL SUPPORT								X						

301.2 PIPING

301.2.1 PIPING MATERIAL

1. CHILLED WATER SUPPLY AND RETURN PIPING
   - A. ASTM A53 BLACK STEEL STANDARD WALL PIPE WITH ROLL GROOVED ENDS FOR VICTAULIC MECHANICAL COUPLINGS.
   - B. ALL PIPE SHALL BE PREPARED IN ACCORDANCE WITH MIL-P-11087C GROOVED END PIPE OR VICTAULIC MANUFACTURER'S PUBLISHED SPECIFICATIONS.
2. CONDENSATE DRAIN PIPING
   - A. COPPER TUBING: ASTM B88, HARD DRAWN
     1. FITTINGS: ASTM B16.22, WROUGHT COPPER, SOLDER JOINT
     2. JOINTS: SOLDER, ASTM B32, GRADE 95TA

301.2.2 VALVES

1. PRESSURE RATINGS
   - A. UNLESS OTHERWISE INDICATED, USE VALVES SUITABLE FOR 200 PSIG NON-SHOCK COLD WATER.
2. GATE VALVES
   - A. NOT USED.
3. BALL VALVES
   - A. VICTAULIC MODEL VIC-BALL STYLE 721
   - B. FURNISH WITH TWO POSITION STANDARD HANDLE.
4. BUTTERFLY VALVES
   - A. VICTAULIC MODEL VIC-300.
   - B. FURNISH WITH LEVER LOCK HANDLE.

301.2.3 COUPLINGS

- A. VICTAULIC STYLE 07 RIDGID COUPLING ON STRAIGHT RUNS.
- B. VICTAULIC STYLE 75 FLEXIBLE COUPLING ON PIPING BENDS
- C. GASKETS: EPDM GRADE "E".

301.2.4 FITTINGS

- A. VICTAULIC ROLLED GROOVED ENDS
- B. FLANGE TO GROOVED ADAPTERS: VICTAULIC STYLE 741.
- C DIELECTRIC FITTINGS: CLEARFLOW STYLE 47-GG.

301.2.3 PIPE SUPPORTS AND HANGERS

1. HANGERS FOR PIPE SIZES UP TO 2 INCHES: MALLEABLE IRON, ADJUSTABLE SWIVEL, SPLIT RING. PHD MANUFACTURING, MODEL 505.
2. HANGERS FOR PIPE SIZES GREATER THAN 2 INCHES: CARBON STEEL, ADJUSTABLE, STANDARD CLEVIS. PHD MANUFACTURING, MODEL 450.
3. VERTICAL SUPPORT: RISER CLAMP. PHD MANUFACTURING, MODEL 550 (STEEL PIPE), MODEL 552 (COPPER TUBING).
4. COPPER TUBE SUPPORT: CARBON STEEL RING, ADJUSTABLE, COPPER PLATED. PHD MANUFACTURING, MODEL 152.
5. SHIELD FOR INSULATED PIPING UP TO 2 INCHES: CARBON STEEL SHIELD OVER INSULATION IN 180 DEGREE SEGMENTS, MINIMUM 12 INCHES LONG. PHD MANUFACTURING, MODEL 170.
6. SHIELD FOR INSULATED PIPING GREATER THAN 2 INCHES: CARBON STEEL PIPE COVERING PROTECTIVE SADDLES. PHD MANUFACTURING, 650 SERIES.
7. ISOLATOR: ONE PIECE STEEL-HINGED SHELL WITH NONCONDUCTING HAIR FELT PADDING. MFR: SUPER STRUT, FIG. NO. C-715 (STEEL PIPE), FIG. NO. C-716 (COPPER TUBE).
8. SUPPORT HORIZONTAL PIPING/TUBING AS FOLLOWS: (UNLESS INDICATED OTHERWISE ON THE DRAWINGS):

SIZE (INCHES	MAX HANGER SPACING	HANGER ROD DIAMETER (INCHES)
1/2 TO 1-3/8	6' - 6"	3/8
1-1/2 TO 2-1/8	10' - 0"	3/8
2-1/2 TO 3	10' - 0"	1/2
4 TO 6	10' - 0"	5/8
8 TO 12	14' - 0"	7/8
14 AND OVER	20' - 0"	1

- A. STEEL HANGER RODS (SOLID): THREADED BOTH ENDS, THREADED ONE END, OR CONTINUOUS THREADED.
- B. PLACE A HANGER WITHIN 12 INCHES OF EACH HORIZONTAL ELBOW.
- C. SUPPORT HORIZONTAL DUCTILE IRON PIPE ADJACENT TO EACH HUB, WITH 5 FEET MAXIMUM SPACING BETWEEN HANGERS.
- D. SUPPORT VERTICAL PIPING AT EVERY FLOOR. SUPPORT VERTICAL DUCTILE IRON PIPE AT EACH FLOOR AT HUB.
- E. WHERE SEVERAL PIPES CAN BE INSTALLED IN PARALLEL AND AT SAME ELEVATION, PROVIDE MULTIPLE OR TRAPEZE HANGERS.
- F. SUPPORT PIPING FROM BUILDING STRUCTURE. HANGING PIPES FROM OTHER PIPES IS NOT PERMITTED. SEE SHEET M9 FOR STRUCTURE SUPPORT DETAIL. HANGING PIPES FROM THE END OF THE CONCRETE TEES IS PROHIBITED.

301.2.4 INSTALLATION

1. PROVIDE DIELECTRIC CONNECTIONS WHEREVER JOINING DISSIMILAR METALS.
2. PROVIDE CLEARANCE FOR INSTALLATION OF INSULATION AND ACCESS TO VALVES AND FITTINGS.
3. SLOPE WATER AND AIR PIPING AND ARRANGE TO DRAIN AT LOW POINTS. SLOPE DRAIN PIPING AT 1/8" PER FOOT.
4. INSTALL UNIONS AT EQUIPMENT OR APPARATUS CONNECTIONS DOWNSTREAM OF VALVES.
5. INSTALL SPRING-LOADED CHECK VALVES (NON-SLAM) ON DISCHARGE OF WATER PUMPS.
6. PROVIDE CHROME-PLATED STEEL ESCUTCHEONS FOR UNINSULATED PIPES AT FINISHED SURFACES.
7. PROVIDE AUTOMATIC AIR VENTS IN COOLING WATER CLOSED PIPING SYSTEMS AT HIGH POINTS. MFR: SARCO TYPE 13W.
8. PROVIDE LONG RADIUS FITTINGS IN PIPING SYSTEMS.
9. SLOPE VENT PIPING DOWN TO DRAINAGE PIPE IT SERVES.
10. PAINT EXPOSED * PIPING IN OCCUPIED SPACES TO MATCH EXISTING BACKGROUND COLOR.
11. USE WELDERS AND BRAZERS CERTIFIED IN ACCORDANCE WITH THE ASME BOILER AND PRESSURE VESSEL CODE, SECTION IX.
12. SEAL OPENINGS AROUND PIPE IN FIRE-RATED WALLS OR FLOORS WITH A UL-APPROVED FIRE RETARDANT MASTIC.
13. SEAL ALL EXISTING FLOOR AND WALL PENETRATIONS OR OPENINGS WITH A U.L. APPROVED FIRE RESISTANT MASTIC.

301.4 INSULATION

1. SCOPE: PROVIDE PIPE INSULATION FOR CHILLED WATER SUPPLY AND RETURN PIPING AND CONDENSATE DRAIN PIPING AS INDICATED ON THE DRAWINGS.
2. PROVIDE INSULATION MATERIAL THAT IS 100% ASBESTOS FREE AND WHICH HAS A FLAME SPREAD/SMOKE DEVELOPED RATING OF 25/50 OR LESS IN ACCORDANCE WITH ASTM E84.
3. ACCEPTABLE INSULATION MANUFACTURER'S ARE OWENS/CORNING FIBERGLASS, ARMINGSTRONG CERTAINTEED, MANVILLE, HALSTEAD, RUBATEX, AND CHILDERS.
4. USE FIBERGLASS PIPE INSULATION:
   - A. INSULATION: RIGID MOLDED IN COMPLIANCE WITH ASTM C547, CLASS 1, MINIMUM DENSITY 3.5 POUNDS/CUBIC FOOT, K-FACTOR OF APPROXIMATELY 0.24 (BTU IN/HR FT. 2 OF.) AT 75 DEGREES F, SUITABLE FOR TEMPERATURES FROM MINUS 20 DEGREES F TO 450 DEGREES F.
   - B. JACKET: FACTORY APPLIED VAPOR BARRIER ALL-SERVICE TYPE WITH SELF-SEALING LAP AND BUTT STRIPS.
   - C. VALVES AND FITTING COVERS: PRE-MOLDED PVC COVERS WITH FIBER GLASS INSERT.
   - D. MANUFACTURER: CERTAINTEED 500 SNAP-ON OR APPROVED EQUIVALENT.
5. USE METAL JACKETING AROUND PIPE INSULATION FOR ALL PIPING EXPOSED IN THE MECHANICAL ROOM.
   - A. METAL JACKETING - PIPING
     1. JACKETING: ALUMINUM, .016 INCHES THICK, EMBOSSED SURFACE, WITH FACTORY BONDED MOISTURE BARRIER, SCREWED IN PLACE WITH ALL JOINTS OVERLAPPED AND SEALED WITH SILICONE CAULK.
     2. VALVE AND FITTING INSULATION COVERS: FABRICATE FROM SAME MATERIAL AS JACKETING OR USE PREFABRICATED INSULATION COVERS MADE IN TWO MATCHING HALVES.
     3. METAL JACKETING BANDS: 1/2 INCH WIDE, ALUMINUM OR STAINLESS.
     4. MANUFACTURER: CHILDERS OR APPROVED EQUIVALENT.
     5. PROVIDE PIPE SADDLES WITH 6 INCH (9 LB/FT3) CALCIUM SILICATE 20 GA X 4" SHIELD LENGTH: USE 180 DEG. SADDLES IF TEAR DROP TYPE HANGERS ARE USED OR 360 DEG. SADDLE IF TRAPEZE HANGERS ARE USED. SADDLES SHALL BE 14 GA. X 8 INCH LONG. "VALUE ENGINEERED PRODUCTS" OR APPROVED EQUIVALENT.
6. NOT USED.
7. NOT USED.
8. INSTALLATION
   - A. VERIFY THAT ITEMS TO BE INSULATED HAVE BEEN PRESSURE TESTED APPLYING INSULATION MATERIAL.
   - B. VERIFY THAT SURFACES ARE CLEAN, FOREIGN MATERIAL REMOVED, AND DRY.
   - C. INSTALL MATERIALS IN ACCORDANCE WITH MANUFACTURER'S INSTRUCTIONS.
   - D. DO NOT INSULATE FACTORY INSULATED EQUIPMENT.
   - E. DO NOT INSULATE NAMEPLATES.
   - F. FIT INSULATION TIGHTLY AGAINST SURFACE TO WHICH IT IS APPLIED.
   - G. DO NOT INSULATE FLEXIBLE CONNECTIONS.
   - H. CONTINUE INSULATION AND VAPOR BARRIER THROUGH PENETRATIONS EXCEPT WHERE WALLS OR FLOORS ARE REQUIRED TO BE FIRE STOPPED OR REQUIRED TO HAVE A FIRE RESISTIVE RATING.
   - I. ON EXPOSED PIPING LOCATED IN FINISHED AREAS, LOCATE COVER SEAMS IN LEAST VISIBLE AREA.
   - J. PROVIDE CONTINUOUS INSULATION THROUGH PIPE HANGERS OR SUPPORTS.
   - K. WHERE INSULATION TERMINATES, TAPER TO PIPE AND FINISH WITH INSULATING CEMENT OR ACRYLIC MASTIC.
   - L. TAPE CIRCUMFERENTIAL JOINTS OF PIPE INSULATION WITH 3 INCH WIDE WHITE VINYL TAPE.
   - M. INSULATE UNIONS, FLANGES AND VALVES IN CHILLED WATER PIPING SYSTEM.
   - N. INSULATE FITTING AND VALVES WHERE REQUIRED WITH SAME MATERIAL THICKNESS AS SPECIFIED FOR ADJACENT PIPE.
9. INSULATION THICKNESS - PROVIDE 1-1/2 INCH THICKNESS FOR CHILLED WATER AND 1 INCH THICKNESS FOR CONDENSATE DRAIN PIPING.

B. METAL JACKETING - DUCTWORK

1. JACKETING: ALUMINUM, .016 INCHES THICK, EMBOSSED SURFACE, WITH FACTORY BONDED MOISTURE BARRIER, SCREWED IN PLACE WITH ALL JOINTS OVERLAPPED AND SEALED WITH SILICONE CAULK.
2. MANUFACTURER: CHILDERS OR APPROVED EQUIVALENT.

301.5 PIPING TESTING

1. HYDRONIC PIPING
   - A PRODUCTS
     1. FURNISH INSTRUMENTS, EQUIPMENT, MATERIAL AND LABOR NECESSARY TO CONDUCT TESTS.
     2. CALIBRATE TESTING EQUIPMENT AT REASONABLE INTERVALS WITH DEVICES OF AN ACCURACY TRACEABLE TO THE NATIONAL BUREAU OF STANDARDS (NBS).
     3. USE PRESSURE CHART RECORDERS THAT ARE DEAD WEIGHT CALIBRATED AND CERTIFIED WITHIN THE 30 DAYS PRIOR TO EACH PRESSURE TEST.

ENGINEER'S SEAL

NOT FOR CONSTRUCTION

NO.	DATE	CLASS REV.	REVISIONS					
B	10/5/01		90% "IN-HOUSE REVIEW"	RC	MS	DD		
A	9/18/01		60% "IN-HOUSE REVIEW"	RC	MS	DD		

HOLMES & NARVER/RAYTHEON (HNR)

CCN CHILLED WATER SYSTEM OPTIMIZATION MASTER PLAN

MECH: SPECIFICATIONS

BLDG. 1498 & 132 TA-3

SUBMITTED DWIGHT DORSEY

APPROVED FOR RELEASE DOUG HEFELE

Los Alamos

SHEET M29 OF

PROJECT ID 100256

DRAWING NO. C52952

REV. B

1. CONC. SLAB ON GRADE.
2. CONC. SLAB ON METAL DECK.
3. ACOUSTICAL LAY IN PANELS.
4. ACCESS FLOOR.
5. SINGLE PLY ROOF ON RIGID INSULATION.
6. PRE-CAST CONCRETE PANELS.
7. INSULATED GLASS IN ALUM. FRAME.
8. C.M.U.
9. EXTERIOR FLUSH GLAZING SYSTEM WITH INSULATING GLASS AND SPANDREL GLASS.
10. METAL PANELS ON MET. STUDS.
11. GUARDRAIL.
12. GYPSUM BOARD ON METAL STUDS.
13. FINISH GRADE.
14. SUSPENDED GYPSUM BOARD FIRE BARRIER.
15. METAL HANGER SYSTEM.

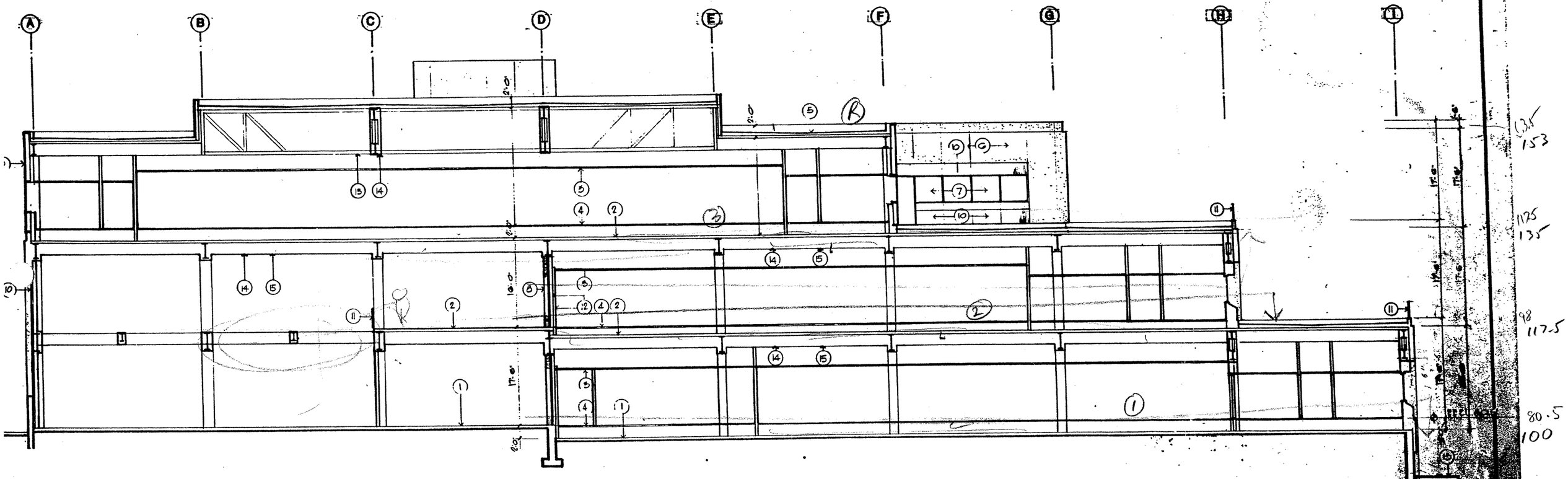

ION A-A

1/8"=1'-0"

THESE RECORD DRAWINGS HAVE BEEN PREPARED FROM INFORMATION SUPPLIED BY THE CONTRACTOR AND SHALL NOT BE CONSTRUED AS A CERTIFICATION OF ACTUAL CONDITIONS BY THE ARCHITECT.

NO	DATE	CLASS REVIEW	REVIEWER	REVISIONS

FMBSM
Flatow Moore Bryan Fleeller McCabe
Architects Planners Engineers

BERNARD JOHNSON INCORPORATED
ENGINEERING

LAB DATA COMMUNICATIONS CENTER
BUILDING SECTION
A 3.1

BLDG SM-1496 TA-3

SUBMITTED
RECOMMENDED
APPROVED

UNITED STATES
Department of Energy
LOS ALAMOS AREA OFFICE - LOS ALAMOS, NEW MEXICO

AE CONTRACT NO.
DE-AC32-86NL33112

CLASSIFICATION Unclass.
REVIEWER

LAB JOB	LAB DWG NO	DOE DWG NO
7050-3	ENG-C-45225	LA-RDT-[illegible]

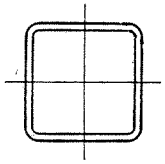

STRUCTURAL TUBING
Square
Dimensions and properties

Dimensions				Properties**					
Nominal* Size	Wall Thickness		Weight per Ft	Area	I	S	r	J	Z
In.	In.		Lb.	In.^{2}	In.^{4}	In.^{3}	In.	In.^{4}	In.^{3}
4.5×4.5	0.2500	¼	13.91	4.09	12.1	5.36	1.72	19.7	6.43
	0.1875	3/16	10.70	3.14	9.60	4.27	1.75	15.4	5.03
4×4	0.5000	½	21.63	6.36	12.3	6.13	1.39	21.8	8.02
	0.3750	⅜	17.27	5.08	10.7	5.35	1.45	18.4	6.72
	0.3125	5/16	14.83	4.36	9.58	4.79	1.48	16.1	5.90
	0.2500	¼	12.21	3.59	8.22	4.11	1.51	13.5	4.97
	0.1875	3/16	9.42	2.77	6.59	3.30	1.54	10.6	3.91
3.5×3.5	0.3125	5/16	12.70	3.73	6.09	3.48	1.28	10.4	4.35
	0.2500	¼	10.51	3.09	5.29	3.02	1.31	8.82	3.70
	0.1875	3/16	8.15	2.39	4.29	2.45	1.34	6.99	2.93
3×3	0.3125	5/16	10.58	3.11	3.58	2.39	1.07	6.22	3.04
	0.2500	¼	8.81	2.59	3.16	2.10	1.10	5.35	2.61
	0.1875	3/16	6.87	2.02	2.60	1.73	1.13	4.28	2.10
2.5×2.5	0.3125	5/16	8.45	2.48	1.87	1.50	0.868	3.32	1.96
	0.2500	¼	7.11	2.09	1.69	1.35	0.899	2.92	1.71
	0.1875	3/16	5.59	1.64	1.42	1.14	0.930	2.38	1.40
2×2	0.3125	5/16	6.32	1.86	0.815	0.815	0.662	1.49	1.11
	0.2500	¼	5.41	1.59	0.766	0.766	0.694	1.36	1.00
	0.1875	3/16	4.32	1.27	0.668	0.668	0.726	1.15	0.840

*Outside dimensions across flat sides.
**Properties are based upon a nominal outside corner radius equal to two times the wall thickness.

STRUCTURAL TUBING
Rectangular
Dimensions and properties

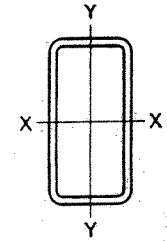

Dimensions				Properties**									
Nominal* Size	Wall Thickness		Weight per Ft	Area	X-X Axis				Y-Y Axis				J
					I_x	S_x	Z_x	r_x	I_y	S_y	Z_y	r_y	
In.	In.		Lb.	In.^{2}	In.^{4}	In.^{3}	In.^{3}	In.	In.^{4}	In.^{3}	In.^{3}	In.	In.^{4}
20×12	0.5000	½	103.30	30.4	1650	165	201	7.37	750	125	141	4.97	1650
	0.3750	⅜	78.52	23.1	1280	128	154	7.45	583	97.2	109	5.03	1270
	0.3125	5/16	65.87	19.4	1080	108	130	7.47	495	82.5	91.8	5.06	1070
20× 8	0.5000	½	89.68	26.4	1270	127	162	6.94	300	75.1	84.7	3.38	806
	0.3750	⅜	68.31	20.1	988	98.8	125	7.02	236	59.1	65.6	3.43	625
	0.3125	5/16	57.36	16.9	838	83.8	105	7.05	202	50.4	55.6	3.46	529
20× 4	0.5000	½	76.07	22.4	889	88.9	123	6.31	61.6	30.8	36.0	1.66	205
	0.3750	⅜	58.10	17.1	699	69.9	95.3	6.40	50.3	25.1	28.5	1.72	165
	0.3125	5/16	48.86	14.4	596	59.6	80.8	6.44	43.7	21.8	24.3	1.74	143
18× 6	0.5000	½	76.07	22.4	818	90.9	119	6.05	141	47.2	53.9	2.52	410
	0.3750	⅜	58.10	17.1	641	71.3	92.2	6.13	113	37.6	42.1	2.57	322
	0.3125	5/16	48.86	14.4	546	60.7	78.1	6.17	97.0	32.3	35.8	2.60	274
16×12	0.6250	⅝	110.36	32.4	1160	145	175	5.98	742	124	144	4.78	1460
	0.5000	½	89.68	26.4	962	120	144	6.04	618	103	118	4.84	1200
	0.3750	⅜	68.31	20.1	748	93.5	111	6.11	482	80.3	91.3	4.90	922
	0.3125	5/16	57.36	16.9	635	79.4	93.8	6.14	409	68.2	77.2	4.93	777
16× 8	0.5000	½	76.07	22.4	722	90.2	113	5.68	244	61.0	69.7	3.30	599
	0.3750	⅜	58.10	17.1	565	70.6	87.6	5.75	193	48.2	54.2	3.36	465
	0.3125	5/16	48.86	14.4	481	60.1	74.2	5.79	165	41.2	45.9	3.39	394
16× 4	0.5000	½	62.46	18.4	481	60.2	82.2	5.12	49.3	24.6	29.0	1.64	157
	0.3750	⅜	47.90	14.1	382	47.8	64.2	5.21	40.4	20.2	23.0	1.69	127
	0.3125	5/16	40.35	11.9	327	40.9	54.5	5.25	35.1	17.6	19.7	1.72	110
14×10	0.6250	⅝	93.34	27.4	728	104	127	5.15	431	86.2	101	3.96	885
	0.5000	½	76.07	22.4	608	86.9	105	5.22	361	72.3	83.6	4.02	730
	0.3750	⅜	58.10	17.1	476	68.0	81.5	5.28	284	56.8	64.8	4.08	564
	0.3125	5/16	48.86	14.4	405	57.9	69.0	5.31	242	48.4	54.9	4.11	477

*Outside dimensions across flat sides.
**Properties are based upon a nominal outside corner radius equal to two times the wall thickness.

18

Steel Pipe Data

Nom. Size and Pipe O.D., D, in.	Schedule Number or Weight[a]	Wall Thickness, in. t	Inside Diameter in. d	Surface Area Outside ft²/ft	Surface Area Inside ft²/ft	Cross-Sectional Metal Area in²	Cross-Sectional Flow Area in²	Weight of Pipe lb/ft	Weight of Water lb/ft	Mfr. Process	Joint Type	Working Pressure[b] ASTM A53 B to 400 °F psig
1/4	40 ST	0.088	0.364	0.141	0.095	0.125	0.104	0.424	0.045	CW	Thrd	188
D = 0.540	80 XS	0.119	0.302	0.141	0.079	0.157	0.072	0.535	0.031	CW	Thrd	871
3/8	40 ST	0.091	0.493	0.177	0.129	0.167	0.191	0.567	0.083	CW	Thrd	203
D = 0.675	80 XS	0.126	0.423	0.177	0.111	0.217	0.141	0.738	0.061	CW	Thrd	820
1/2	40 ST	0.109	0.622	0.220	0.163	0.250	0.304	0.850	0.131	CW	Thrd	214
D = 0.840	80 XS	0.147	0.546	0.220	0.143	0.320	0.234	1.087	0.101	CW	Thrd	753
3/4	40 ST	0.113	0.824	0.275	0.216	0.333	0.533	1.13	0.231	CW	Thrd	217
D = 1.050	80 XS	0.154	0.742	0.275	0.194	0.493	0.432	1.47	0.187	CW	Thrd	681
1	40 ST	0.133	1.049	0.344	0.275	0.494	0.864	1.68	0.374	CW	Thrd	226
D = 1.315	80 XS	0.179	0.957	0.344	0.251	0.639	0.719	2.17	0.311	CW	Thrd	642
1 1/4	40 ST	0.140	1.380	0.435	0.361	0.669	1.50	2.27	0.647	CW	Thrd	229
D = 1.660	80 XS	0.191	1.278	0.435	0.335	0.881	1.28	2.99	0.555	CW	Thrd	594
1 1/2	40 ST	0.145	1.610	0.497	0.421	0.799	2.04	2.72	0.881	CW	Thrd	231
D = 1.900	80 XS	0.200	1.500	0.497	0.393	1.068	1.77	3.63	0.765	CW	Thrd	576
2	40 ST	0.154	2.067	0.623	0.541	1.07	3.36	3.65	1.45	CW	Thrd	230
D = 2.375	80 XS	0.218	1.939	0.622	0.508	1.48	2.95	5.02	1.28	CW	Thrd	551
2 1/2	40 ST	0.203	2.469	0.753	0.646	1.70	4.79	5.79	2.07	CW	Weld	539
D = 2.875	80 XS	0.276	2.323	0.753	0.608	2.25	4.24	7.66	1.83	CW	Weld	835
3	40 ST	0.216	3.068	0.916	0.803	2.23	7.39	7.57	3.20	CW	Weld	482
D = 3.500	80 XS	0.300	2.900	0.916	0.759	3.02	6.60	10.25	2.86	CW	Weld	767
4	40 ST	0.237	4.026	1.178	1.054	3.17	12.73	10.78	5.51	CW	Weld	430
D = 4.500	80 XS	0.337	3.826	1.178	1.002	4.41	11.50	14.97	4.98	CW	Weld	695
6	40 ST	0.280	6.065	1.734	1.588	5.58	28.89	18.96	12.50	ERW	Weld	696
D = 6.625	80 XS	0.432	5.761	1.734	1.508	8.40	26.07	28.55	11.28	ERW	Weld	1209
8	30	0.277	8.071	2.258	2.113	7.26	51.16	24.68	22.14	ERW	Weld	526
D = 8.625	40 ST	0.322	7.981	2.258	2.089	8.40	50.03	28.53	21.65	ERW	Weld	643
	80 XS	0.500	7.625	2.258	1.996	12.76	45.66	43.35	19.76	ERW	Weld	1106
	30	0.307	10.136	2.814	2.654	10.07	80.69	34.21	34.92	ERW	Weld	485
10	40 ST	0.365	10.020	2.814	2.623	11.91	78.85	40.45	34.12	ERW	Weld	606
D = 10.75	XS	0.500	9.750	2.814	2.552	16.10	74.66	54.69	32.31	ERW	Weld	887
	80	0.593	9.564	2.814	2.504	18.92	71.84	64.28	31.09	ERW	Weld	1081
	30	0.330	12.090	3.338	3.165	12.88	114.8	43.74	49.68	ERW	Weld	449
12	ST	0.375	12.000	3.338	3.141	14.58	113.1	49.52	48.94	ERW	Weld	528
D = 12.75	40	0.406	11.938	3.338	3.125	15.74	111.9	53.48	48.44	ERW	Weld	583
	XS	0.500	11.750	3.338	3.076	19.24	108.4	65.37	46.92	ERW	Weld	748
	80	0.687	11.376	3.338	2.978	26.03	101.6	88.44	43.98	ERW	Weld	1076

[a] Numbers are schedule numbers per ASTM B36.10; ST = Standard Weight; XS = Extra Strong.

[b] Working pressures have been calculated per ASME/ANSI B31.9 using furnace butt weld (continuous weld, CW) pipe through 4 in. and electric resistance weld (ERW) thereafter. The allowance, A, has been taken as:

(a) 12.5% of t for mill tolerance on pipe wall thickness, plus

(b) An arbitrary corrosion allowance of 0.025 in. for pipe sizes through NPS 2 and 0.065 in. from NPS 2½ through 20, plus

(c) A thread cutting allowance for sizes through NPS 2.

Because the pipe wall thickness of threaded standard weight pipe is so small after deducting the allowance, A, the mechanical strength of the pipe is impaired. It is good practice to limit standard weight threaded pipe pressures to 90 psig for steam and 125 psig for water.

LANL
CCF/LDCC Chilled Water
Plant Conversion

rec'd 9-20-01
from David Walker, Bickers & Paxton
ME-

19

RIGID COUPLING
Style 07

PIPE		COUPLING COMPLETE† With "E" or "T" Gasket			"E" or "T" Gasket Only Price Each	SPARE PARTS			
						Bolt & Nut			
Nominal Size (Inches)	Outside Diameter	Weight Each (Lbs.)	Price Each Painted	Price Each Galv.		Number*	Size (Inches)	Price Each Black	Price Each Plated
1	1.315	1.6	$ 18.55	$ 22.15	$ 8.20	[illegible]	[illegible]	$ 3.35	$ 3.70
1¼	1.660	2.0	18.55	22.15	8.50	[illegible]	[illegible]	3.35	3.70
1½	1.900	1.6	18.55	22.15	9.25	[illegible]	[illegible]	3.35	3.70
2	2.375	2.3	19.00	23.20	9.25	[illegible]	[illegible]	3.55	4.00
2½	2.875	2.8	21.90	27.05	11.25	2	[illegible]	3.55	4.00
3 O.D.	3.000	3.6	21.90	27.05	11.25	2	[illegible]	3.55	4.00
3	3.500	3.1	25.66	31.80	12.20	2	[illegible]	3.55	4.00
4	4.500	4.8	36.30	45.10	15.60	2	[illegible]	3.55	4.00
4¼	4.250	5.2	35.55	43.90	15.60	2	[illegible]	—	5.10
5	5.563	7.1	47.15	58.75	20.40	2	[illegible]	4.50	5.10
5¼ O.D.	5.250	7.4	45.00	56.50	20.40	2	[illegible]	—	5.85
5½ O.D.	5.500	7.6	47.15	58.75	20.40	2	[illegible]	—	5.85
6	6.625	8.7	63.05	77.95	22.05	2	[illegible]	4.50	5.10
6¼ O.D.	6.250	9.2	63.05	77.95	22.05	2	[illegible]	—	5.85
6½ O.D.	6.500	7.2	63.05	77.95	22.05	2	[illegible]	4.50	5.10
8	8.625	14.9	99.35	123.50	30.50	2	[illegible]	5.25	5.85
10	10.750	25.0	152.20	193.70	39.10	2	[illegible]	11.85	15.05
12	12.750	28.2	170.35	217.25	45.40	2	[illegible]	11.65	15.05
14	14.000	32.8	260.30	317.70	62.75	3	[illegible]	8.20	11.25
16	16.000	41.2	339.45	412.35	87.00	3	[illegible]	8.20	11.25
18	18.000	54.2	392.50	483.60	105.10	3	[illegible]	8.20	11.25
20	20.000	67.2	467.30	581.15	161.75	4	1 × 5 [illegible]	9.50	11.90
24	24.000	76.2	688.25	829.25	224.85	4	1 × 5 [illegible]	9.50	11.90

*Number of bolts equals number of segments supplied.
† Surcharge for couplings supplied without gasket. Contact Victaulic for pricing.

#Metric thread size bolts available, contact Victaulic.
J.I.S. 8", 10", 12" available, contact Victaulic.

SNAP JOINT® COUPLING
Style 78

PIPE		COMPLETE COUPLING†			SPARE PARTS	
Nominal Size (Inches)	Outside Diameter (Inches)	Weight Each (Lbs.)	Price Each Painted	Price Each Plated	Gasket Only Price Each	Bolt & Nut
1 (a)	1.315	0.8	$ 22.45	$ 25.50	$ 8.20	NO NUT AND BOLT REQUIRED
1¼ (a)	1.660	1.1	25.20	29.15	8.50	
1½ (a)	1.900	1.7	29.00	33.55	9.25	
2 (b)	2.375	1.8	29.40	34.15	9.26	
2½ (b)	2.875	2.5	38.25	45.30	11.25	
3 (b)	3.500	3.0	46.30	54.75	12.20	
4 (b)	4.500	5.4	59.60	73.20	15.60	
5 (c)	5.563	9.6	118.65	143.30	20.40	
6 (c)	6.625	11.4	128.70	154.80	22.05	
8 (c)	8.625	15.3	197.95	236.15	30.50	

(a) Available with steel toggle locking assembly only.
(b) Extended length cast handle standard; steel toggle is a no cost option.
(c) Available with cast handle only.
† Surcharge for couplings supplied without gasket. Contact Victaulic for pricing.

rec'd from David Walker
B&P

20

VIC-FLANGE®
Grooved to Flange Adapters
Style 741
Grooved Pipe Adapters to ANSI Class 125 and 150 Flanges

for elbows

PIPE		VIC-FLANGE COMPLETE			SPARE PARTS
Nominal Size (Inches)	Outside Diameter	Wgt, Each (Lbs.)	Price Each		Gasket Price Ea.
			Painted	Galv.	
STYLE 741 - Hinged					
2	2.375	3.1	$ 76.85	$ 88.40	$ 7.35
2½	2.875	4.7	95.65	112.10	8.70
3	3.500	5.4	103.20	121.90	9.70
4	4.500	7.7	138.45	163.25	12.60
5	5.563	9.3	150.75	189.75	15.70
6	6.625	10.3	175.55	207.90	17.95
6½ O.D.	6.500	10.0	175.55	207.90	17.96
8	8.626	16.6	198.25	241.95	24.46
10	10.750	24.2	314.40	380.05	31.65
12	12.750	46.6	411.50	503.10	36.70
STYLE 741 - Four Piece					
14	14.000	62.0	$944.90	$1105.50	$48.75
16	16.000	79.0	1096.35	1292.50	54.50
18	18.000	82.3	1349.70	1635.75	80.00
20	20.000	103.3	1624.50	1976.90	86.50
24	24.000	142.0	2078.85	2550.05	95.95

The Vic-Flange adapters utilize standard ANSI 125/150 flange bolts (supplied by installer). Bolt hole pattern is standard for ANSI CL. 150 and 125 CL. flanges. Flanged Adapter Nipples are also available in ¾" and larger sizes in ANSI CL. 125, CL. 150, CL 300 and other ANSI ratings – quoted on application. PN10 and PN16 Flanges, sizes 60 - 406 mm, available. Contact Victaulic. Australian Table "E" available - 2, 3, 4, 6, 6.5, 8. Contact Victaulic.

FLANGE BOLT AND NUT SETS

Flange Size (Inches)	BOLT AND NUT		Price Per Set
	Quantity Per Set	Size # (Inches)	
3	4	⅝ × 3	$13.75
4	8	⅝ × 3	27.40
5	8	¾ × 3½	30.50
6	8	¾ × 3½	30.50
8	8	¾ × 3½	30.50
10	12	⅞ × 4	69.65
12	12	⅞ × 4	69.65
14	12	1 × 4½	142.15
16	16	1 × 4½	189.50
18	16	1⅛ × 4¾	303.45
20	20	1⅛ × 5¼	390.00
24	20	1¼ × 5¾	463.00

FLANGE WASHERS

Vic-Flange Nominal Size (Inches)	Style 741	Style 743
2	$24.85	$24.85
2½	25.90	25.90
3	30.60	30.60
4	35.80	35.80
5	43.45	43.45
6 & 6 O.D.	49.55	49.55
8	63.05	63.05
10	87.75	87.75
12	113.65	113.65
14	123.90	—
16	220.85	—
18	235.30	—
20	270.30	—
24	453.90	—

VIC-FLANGE ADAPTER ACCESSORIES

Vic-Flange adapters require a smooth, hard surface at the mating flange face for effective sealing. Some applications for which the Vic-Flange adapter is otherwise well suited do not provide an adequate mating surface. In such cases, it is recommended that a metal Flange Washer be inserted between the Vic-Flange adapter and the mating flange to provide the necessary sealing surface.

Typical applications where a Vic-Flange Washer should be used are:

1. When mating to a serrated flange: a flange gasket should be used adjacent to the serrated flange and then the Flange Washer is inserted between the Vic-Flange adapter and the flange gasket.
2. When mating to a wafer valve: where typical valves are rubber lined and partially rubber faced (smooth or not), the Flange Washer is placed between the valve and the Vic-Flange adapter.
3. When mating to a rubber faced flange: the Flange Washer is placed between the Vic-Flange adapters and the rubber faced flange.
4. When mating C.I. flanges to IPS flanges: the Flange Washer is placed between two Vic-Flange adapters. If one flange is not a Vic-Flange adapter (e.g., flanged valve), then a flanged gasket must be placed adjacent to that flange and the Flange Washer inserted between the flange gasket and the Vic-Flange adapter.
5. When mating to components (valves, strainers, etc.) where the component flange face has an insert: follow the same [redacted] as in Application 1.

Recd from David Walker B&P

21

ELBOWS

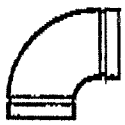
No. 10

No. 11

No. 12

No. 13

Nom. Size (Inches)	90° ELBOW No. 10			45° ELBOW No. 11			22½° ELBOW No. 12			11¼° ELBOW No. 13		
	Wgt. Each (Lbs.)	Price Each		Wgt. Each (Lbs.)	Price Each		Wgt. Each (Lbs.)	Price Each		Wgt. Each (Lbs.)	Price Each	
		Painted	Galv.		Painted	Galv.		Painted	Galv.		Painted	Galv.
¾	0.5	$ 25.55	$ 32.25	0.5	$ 25.55	$ 30.35	–	—	—	–	—	—
1	0.6	25.55	32.25	0.6	25.55	30.35	0.6	$ 27.30	$ 33.55	0.3 (sw)	$ 65.25	$ 72.65
1¼	0.9	25.55	32.25	0.9	25.55	30.35	0.8 (sw)	27.30	33.55	0.5 (sw)	65.25	72.65
1½	1.1	25.55	32.25	0.9	25.55	30.35	0.8 (sw)	27.30	33.55	0.5 (sw)	65.25	72.65
2	2.0	25.55	32.25	1.8	25.55	30.35	1.4‡	27.30	33.55	1.0	65.25	72.65
2½	3.0	25.55	32.25	2.2	25.55	30.35	1.5‡	27.30	33.55	1.5 (sw)	65.25	72.65
3	4.9	45.45	54.20	3.1	45.45	51.05	3.1‡	40.00	48.25	2.1	40.00	47.65
3 O.D.	5.0	25.55	32.25	3.4 (sw)	25.55	30.35	–	—	—	–	—	—
3½	5.6	52.95	66.40	4.3	52.95	63.00	4.0 (sw)	95.75	122.00	2.7 (sw)	95.75	107.60
4	8.5	49.55	66.00	5.6	49.55	61.65	5.6	53.65	66.25	3.6	53.65	62.95
4¼ O.D.	8.5	49.55	66.00	5.6	49.55	61.65	–	—	—	–	—	—
*4½	10.0 (sw)	+	+	6.0 (sw)	+	+	6.6	+	+	4.2 (sw)	+	+
5	11.4	119.70	147.50	8.3	119.70	141.35	7.8 (sw)	166.40	191.40	5.0 (sw)	166.40	186.60
5¼ O.D.	11.4	119.70	147.50	8.3	119.70	141.35	–	—	—	–	—	—
5½ O.D.	11.4	119.70	147.50	8.3	119.70	141.35	–	—	—	–	—	—
6	18.4	140.60	177.95	11.7	140.60	169.20	12.2‡	152.00	184.55	7.0	152.00	174.90
6¼ O.D.	18.6	140.60	177.95	11.7	140.60	169.20	–	—	—	–	—	—
6½ O.D.	18.8	140.60	177.95	11.8	140.60	169.20	11.4 (sw)	+	+	7.4	+	+
8	35.1	294.55	369.85	20.4	294.55	352.05	20.0‡	318.15	376.45	10.1	271.65	307.40
10	67.8	458.55	564.95	37.5	398.20	475.85	30.0 (sw)	436.80	539.50	11.8 (sw)	407.55	463.00
12	74.0	734.95	901.75	66.7	693.15	814.80	40.0 (sw)	590.50	696.70	29.3 (sw)	590.50	680.55
14@	164.0*	1537.35	1897.55	82.0*	1041.40	1240.85	46.0 (sw)	+	+	32.0 (sw)	+	+
16@	210.0*	1997.10	2456.20	100.0*	1295.76	1529.55	58.0 (sw)	+	+	42.0 (sw)	+	+
18@	273.0*	2534.85	3004.05	135.0*	1518.85	1770.85	65.0 (sw)	+	+	53.2 (sw)	+	+
20@	343.0*	3341.45	3942.80	174.0*	1995.60	2332.65	78.6 (sw)	+	+	65.0 (sw)	+	+
24@	516.0*	4838.95	5728.35	251.0*	3064.95	3552.05	140.0 (sw)	+	+	60.0 (sw)	+	+

*These fittings are same dimensions as No. 100 Long Radius Steel Elbows (1½" D). J.I.S. 90°, 45° available in 6", 10", 12" sizes. Contact Victaulic.
‡Gooseneck design. (s) Forged steel. (sw) Segmentally welded steel.
@ Large diameter fittings are supplied standard with roll grooves. Contact Victaulic for cut groove pricing.

LONG RADIUS ELBOWS 1½D*

Nominal Size (Inches)	90° LONG RAD. ELBOW No. 100			45° LONG RAD. ELBOW No. 110		
	Weight Each (Lbs.)	Price Each		Weight Each (Lbs.)	Price Each	
		Painted	Galv.		Painted	Galv.
2	2.5	$ 58.75	$ 73.25	1.8	$ 50.95	$ 61.65
3	6.0	58.75	73.25	4.9	50.95	61.65
4	12.3	87.95	112.20	7.3	62.10	78.80
6	30.4	257.45	322.15	17.4	184.95	225.30
6½ O.D.	29.1	+	—	19.0	+	—
8	66.0	617.55	761.15	36.0	321.50	397.95
10	107.0	1024.40	1250.15	57.0	639.25	775.35
12	156.0	1466.45	1799.25	90.0	1005.10	1219.05
14@	164.0	1537.35	1897.55	82.0	1041.40	1240.85
16@	210.0	1997.10	2456.20	100.0	1295.75	1529.55
18@	273.0	2534.85	3004.05	135.0	1518.85	1770.85
20@	343.0	3341.45	3942.80	174.0	1995.60	2332.65
24@	516.0	4838.95	5728.35	251.0	3064.95	3552.05

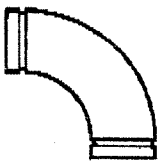
No. 100

No. 110

*See pages 29 & 30 for long radius 3-D, 5-D and 6-D elbows.
+Quoted on application. @Large diameter fittings are supplied standard with roll grooves. Contact Victaulic for cut groove pricing.

Victaulic fittings are made of malleable or ductile iron except those marked (sw) segmentally welded steel; (s) steel.

Rec'd from David Walker B&P

IV. GROOVED END FITTINGS

TEES

CROSS

WYE

22

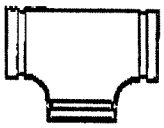

No. 20

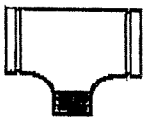

No. 29

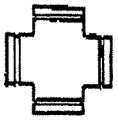

No. 35

No. 33

Nominal Size (Inches)	Weight Each (Lbs.)	Tee No. 20 Price Each Painted	Tee No. 20 Price Each Galv.	Tee with Threaded Branch No. 29M Price Each Painted	Tee with Threaded Branch No. 29M Price Each Galv.	Steel Cross No. 35 Weight Each (Lbs.)	Steel Cross No. 35 Price Each Painted	Steel Cross No. 35 Price Each Galv.	Steel 90 True Y No. 33 Weight Each (Lbs.)	Steel 90 True Y No. 33 Price Each Painted	Steel 90 True Y No. 33 Price Each Galv.
¾	0.6	$ 39.35	$ 49.30	$ 59.10	$ 70.20	0.9	$ 97.45	$106.90	–	—	—
1	1.0	39.35	49.30	59.10	70.20	1.3	97.45	106.90	1.1	$150.55	$170.15
1¼	1.5	39.35	49.30	59.10	70.20	2.1	117.60	130.40	1.5	150.55	170.15
1½	2.0	39.35	49.30	59.10	70.20	2.5	126.75	140.00	1.8	150.55	170.15
2	2.8	39.35	49.30	59.10	70.20	3.8	71.60	81.50	2.5	150.55	170.15
2½	4.8	39.35	49.30	59.10	70.20	6.1	71.60	81.50	4.3	150.55	170.15
3	6.1	55.20	71.95	88.90	108.20	10.5	128.70	150.10	6.1	179.95	203.05
3 O.D.	7.3	39.35	49.30	—	—	–	—	—	–	—	—
3½	7.9 (aw)	+	+	+	+	11.5	259.90	295.10	9.6	192.45	235.85
4	12.6	84.30	109.10	126.75	154.70	15.8	214.30	251.00	10.0	235.70	270.00
4¼ O.D.	12.6	84.30	109.10	—	—	–	—	—	–	—	—
4½	15.0 (aw)	+	+	—	—	18.5	+	+	–	—	—
5	17.8	198.00	239.50	304.10	353.15	20.0	437.80	502.40	15.0	337.85	386.55
5¼ O.D.	17.8	198.00	239.50	—	—	–	—	—	–	—	—
5½ O.D.	17.8	198.00	239.50	—	—	–	—	—	–	—	—
6	27.3	228.80	297.20	317.05	392.75	28.0	563.25	649.80	22.3	418.10	484.00
6¼ O.D.	27.1	228.80	297.20	—	—	–	—	—	–	—	—
6½ O.D.	27.1	228.80	297.20	—	—	–	—	—	–	—	—
8	47.6	502.65	627.80	490.90	615.20	48.0	741.90	872.85	36.0	602.15	704.05
10	73.0	893.40	1100.40	667.70	859.00	121.5	1081.90	1272.55	69.9	888.65	1035.25
12	99.0	1246.65	1513.30	1001.75	1251.35	110.0	1561.30	1850.00	80.0	981.75	1181.10
14@	151.0 (aw)	1373.55	1657.10	—	—	198.0	1891.90	2202.00	134.2	1311.20	1564.55
16@	188.0 (aw)	1743.85	2105.90	—	—	250.0	2474.90	2865.80	167.0	1703.10	2030.90
18@	263.0 (aw)	2179.80	2672.70	—	—	310.0	3033.65	3574.60	294.0	1948.15	2375.55
20@	339.0 (aw)	3123.75	3765.90	—	—	452.0	4297.85	4993.50	281.0	2825.45	3375.45
24@	473.0 (aw)	4752.85	5874.30	—	—	795.0	6634.95	8067.50	523.0	4392.80	5350.70

+Quoted on application
Victaulic fittings listed above are made of ductile or malleable iron except those marked (aw) segmentally welded steel; (s) steel.
@ Large diameter fittings are supplied standard with roll grooves. Contact Victaulic for cut groove pricing.
J.I.S. Tee available in 8", 10", 12" sizes. Contact Victaulic.

REDUCING BASE SUPPORT ELBOWS

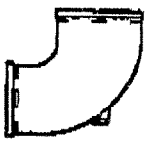

No. R-10G
Grooved × Grooved
(G × G)

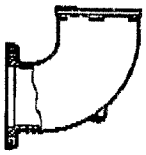

No. R-10F
Grooved × Flanged
(G × F)

Nominal Size (Inches) Inlet × Outlet	Grooved × Grooved No. R-10G Weight Each (Lbs.)	Price Each Painted	Price Each Galv.	Grooved × Flanged No. R-10F Weight Each (Lbs.)	Price Each Painted	Price Each Galv.
6 × 4	19.0	$429.55	$479.60	33.0	$477.20	$ 543.80
6 × 5	23.0	486.45	544.60	36.0	540.45	616.45
8 × 6	33.0	653.55	733.55	51.0	726.05	828.15
10 × 8	61.0	976.85	1109.35	88.0	1087.65	1251.20

rec'd from David Walker
B & P

REDUCERS

23

Size (Inches)	Concentric Reducer No. 50 Wgt. Ea. (Lbs.)	Concentric Reducer No. 50 Painted	Concentric Reducer No. 50 Galv.	Eccentric Reducer No. 51 ‡ Wgt. Ea. (Lbs.)	Eccentric Reducer No. 51 ‡ Painted	Eccentric Reducer No. 51 ‡ Galv.
1½ × 1	0.8	$ 29.70	$ 33.25	4.5	+	+
2 × ¾	0.9	29.70	33.25	2.0	+	+
× 1	0.7	29.70	33.25	2.3	+	+
× 1¼	1.2	32.70	36.65	4.6	+	+
× 1½	1.0	29.70	33.25	4.6	+	+
2½ × 1	3.3	+	+	3.5	+	+
× 1½	3.6	+	+	3.7	+	+
× 2	3.9	29.70	33.25	4.3*	$ 62.95	$ 82.25
3 × 1	1.3	32.80	37.85	4.8	+	+
× 2	1.6	26.10	30.50	6.0*	72.35	94.50
× 2½	1.6	35.95	41.45	7.0*	72.35	96.65
3½ × 3	2.0	38.25	44.05	7.0	+	+
4 × 1	2.4	39.45	46.40	6.5	+	+
× 1½	6.9	+	+	8.1	+	+
× 2	2.4	34.70	41.15	8.0*	68.45	117.65
× 2½	2.7	43.55	50.80	7.6*	68.45	117.65
× 3	2.5	43.55	50.80	7.8*	68.45	117.85
× 3½	2.9	43.55	51.45	8.0	+	+
5 × 2½	11.0	+	+	10.8	+	+
× 3	4.9	50.95	59.90	11.1	+	+
× 4	4.3	60.85	72.65	12.0*	120.50	162.30
6 × 1	5.0	80.95	95.90	14.5	+	+
× 2	6.6	80.95	95.90	14.5	+	+
× 2½	14.2	+	+	14.2	+	+
× 3	6.4	80.95	95.90	15.0*	160.50	214.45
× 3½	–	–	–	–	–	–
× 4	6.5	70.50	87.15	17.0*	140.50	196.70
× 5	6.4	104.35	123.95	17.0*	168.50	228.15

+Quoted on application.
‡ Concentric reducers 14" and larger and all eccentric reducers (*except as noted) are steel.
Steel Reducers eccentric and concentric available through 30", contact Victaulic for details.

Size (Inches)	Concentric Reducer No. 50 Wgt. Ea. (Lbs.)	Concentric Reducer No. 50 Painted	Concentric Reducer No. 50 Galv.	Eccentric Reducer No. 51 ‡ Wgt. Ea. (Lbs.)	Eccentric Reducer No. 51 ‡ Painted	Eccentric Reducer No. 51 ‡ Galv.
8 × 2½	7.9	+	+	26.1	+	+
× 3	9.3	144.70	171.90	22.0	+	+
× 4	10.4	144.70	172.80	23.0	+	+
× 5	11.6	144.70	173.85	23.0	+	+
× 6	11.9	184.55	219.85	24.0*	284.90	369.25
10 × 4	19.7	294.65	345.35	32.0	+	+
× 6	20.0	322.20	382.45	36.9	+	+
× 8	22.1	322.20	368.80	40.3	+	+
12 × 4	44.0	+	+	48.0	+	+
× 6	24.6	383.95	452.00	50.0	+	+
× 8	52.0	477.85	570.25	53.5	+	+
× 10	36.0	562.65	664.20	57.0	+	+
‡14 × 6	65.0	+	+	60.0	+	+
× 8	65.0	+	+	60.0	+	+
× 10	65.0	+	+	65.0	+	+
× 12	65.0	+	+	66.0	+	+
‡16 × 8	73.0	+	+	70.0	+	+
× 10	105.0	+	+	106.0	+	+
× 12	105.0	+	+	73.0	+	+
× 14	73.0	+	+	75.0	+	+
‡18 × 10	119.0	+	+	+	+	+
× 12	91.0	+	+	95.0	+	+
× 14	91.0	+	+	91.0	+	+
× 16	91.0	+	+	175.0	+	+
‡20 × 12	120.0	+	+	160.0	+	+
× 14	149.0	+	+	125.0	+	+
× 16	120.0	+	+	153.0	+	+
× 18	136.0	+	+	217.5	+	+
‡24 × 10	145.0	+	+	+	+	+
× 12	150.0	+	+	148.0	+	+
× 14	161.0	+	+	+	+	+
× 16	162.0	+	+	155.0	+	+
× 18	162.0	+	+	162.0	+	+
× 20	151.0	+	+	190.0	+	+

+Quoted on application.
‡ Concentric reducers 14" and larger and all eccentric reducers (*except as noted) are steel.
Steel Reducers eccentric and concentric available through 30", contact Victaulic for details.

GROOVED IPS-FTGS.

Rec'd from David Walker
B&P

Grinnell®

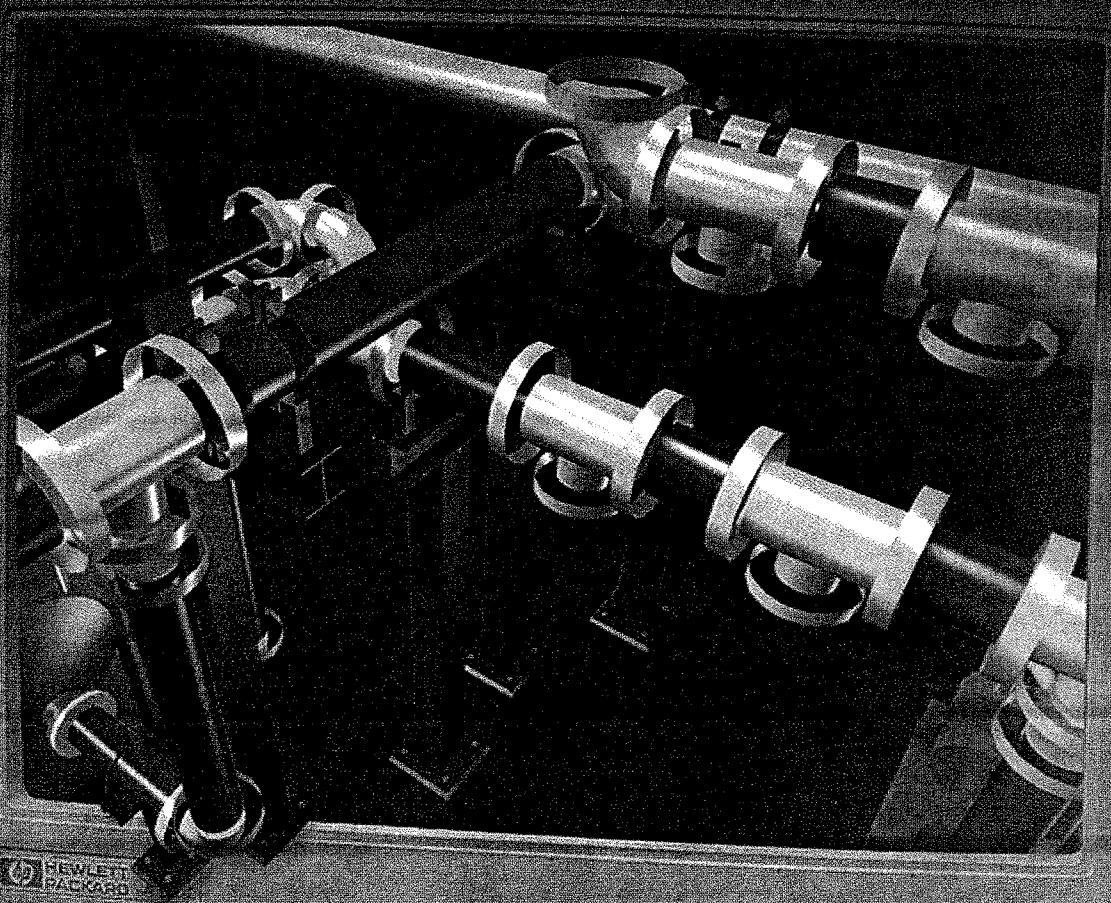

Pipe Hanger Design & Engineering

A tyco INTERNATIONAL LTD. COMPANY

10.750" O.D. 10" PIPE — WEIGHTS OF PIPING MATERIALS

25

PIPE	Schedule No.	5S	10S		20	30	40	60	80	100	120	140	160
	Wall Designation						Std.		XS				
	Thickness — In.	.134	.165	.219	.250	.307	.365	.500	.593	.718	.843	1.000	1.125
	Pipe — Lbs/Ft	**15.15**	**18.70**	**24.63**	**28.04**	**34.24**	**40.5**	**54.7**	**64.3**	**76.9**	**89.2**	**104.1**	**115.7**
	Water — Lbs/Ft	**37.4**	**36.9**	**36.2**	**35.77**	**34.98**	**34.1**	**32.3**	**31.1**	**29.5**	**28.0**	**26.1**	**24.6**
WELDING FITTINGS	L.R. 90° Elbow	**29.2** 2.5	**36.0** 2.5				**84** 2.5	**112** 2.5					**230** 2.5
	S.R. 90° Elbow	**20.3** 1.7	**24.9** 1.7				**62.2** 1.7	**74** 1.7					
	L.R. 45° Elbow	**14.6** 1	**18.0** 1				**42.4** 1	**53.8** 1					**109** 1
	Tee	**30.0** 2.1	**37.0** 2.1				**104** 2.1	**132** 2.1					**222** 2.1
	Lateral	**47.5** 4.4	**70.0** 4.4				**124** 4.4	**200** 4.4					
	Reducer	**8.1** .6	**14.0** .6				**23.2** .6	**31.4** .6					**58** .6
	Cap	**3.8** 1.3	**4.7** 1.3				**20** 1.3	**26.3** 1.3					**59** 1.3

	Temperature Range °F	100-199	200-299	300-399	400-499	500-599	600-699	700-799	800-899	900-999	1000-1099	1100-1200
INSULATION 85% Magnesia Calcium Silicate	Nom. Thick., In.	1½	1½	2	2½	2½	3	3½	3½	4	4	4½
	Lbs./Ft	**5.20**	**5.20**	**7.07**	**8.93**	**8.93**	**11.0**	**13.2**	**13.2**	**15.5**	**15.5**	**18.1**
Combination	Nom. Thick., In.						3	3½	3½	4	4	4½
	Lbs/Ft						**15.4**	**19.3**	**19.3**	**23**	**23**	**27.2**

		Cast Iron		Steel						
	Pressure Rating psi	125	250	150	300	400	600	900	1500	2500
FLANGES	Screwed or Slip-On	**45** 1.5	**93** 1.5	**50** 1.5	**100** 1.5	**117** 1.5	**213** 1.5	**293** 1.5	**528** 1.5	**1148** 1.5
	Welding Neck			**59** 1.5	**110** 1.5	**152** 1.5	**225** 1.5	**316** 1.5	**546** 1.5	**1291** 1.5
	Lap Joint			**50** 1.5	**110** 1.5	**138** 1.5	**231** 1.5	**325** 1.5	**577** 1.5	**1120** 1.5
	Blind	**66** 1.5	**120** 1.5	**77** 1.5	**146** 1.5	**181** 1.5	**267** 1.5	**338** 1.5	**599** 1.5	**1248** 1.5
FLANGED FITTINGS	S.R. 90° Elbow	**182** 4.8	**306** 4.9	**240** 4.8	**343** 4.9	**462** 5.2	**747** 5.6	**995** 5.8		
	L.R. 90° Elbow	**237** 5.8		**290** 5.8	**438** 5.8					
	45° Elbow	**152** 4.1	**256** 4.2	**185** 4.1	**288** 4.2	**332** 4.3	**572** 4.6	**732** 4.7		
	Tee	**277** 7.2	**446** 7.4	**353** 7.2	**527** 7.4	**578** 7.8	**1007** 8.4	**1417** 8.7		
VALVES	Flanged Bonnet Gate	**471** 7.7	**899** 8.3	**455** 4.5	**750** 5	**1035** 6	**1575** 6.9	**2140** 7.1	**3690** 8	
	Flanged Bonnet Globe or Angle	**541** 9.1	**943** 9.1	**485** 4.5	**855** 5.5	**1070** 6	**1500** 6.3	**2500** 6.8	**4160** 8	
	Flanged Bonnet Check	**453** 9.1	**751** 9.1	**370** 6	**485** 6.1	**605** 6.3	**1030** 6.8	**1350** 7	**2280** 7.5	
	Pressure Seal Bonnet — Gate						**1450** 4.9	**1860** 5.5	**3150** 6	
	Pressure Seal Bonnet — Globe							**1800** 5	**1910** 6	

Boldface type is weight in pounds. Lightface type beneath weight is weight factor for insulation.

Insulation thicknesses and weights are based on average conditions and do not constitute a recommendation for specific thicknesses of materials. Insulation weights are based on 85% magnesia and hydrous calcium silicate at 11 lbs/cubic foot. The listed thicknesses and weights of combination covering are the sums of the inner layer of diatomaceous earth at 21 lbs/cubic foot and the outer layer at 11 lbs/cubic foot.

Insulation weights include allowances for wire, cement, canvas, bands and paint, but not special surface finishes.

To find the weight of covering on flanges, valves or fittings, multiply the weight factor by the weight per foot of covering used on straight pipe.

Valve weights are approximate. When possible, obtain weights from the manufacturer.

Cast iron valve weights are for flanged end valves; steel weights for welding end valves.

All flanged fitting, flanged valve and flange weights include the proportional weight of bolts or studs to make up all joints.

from Pipe Hanger Design & Engineering

Grinnell®

Apple 26

Pipe Hangers

Catalog PH-98

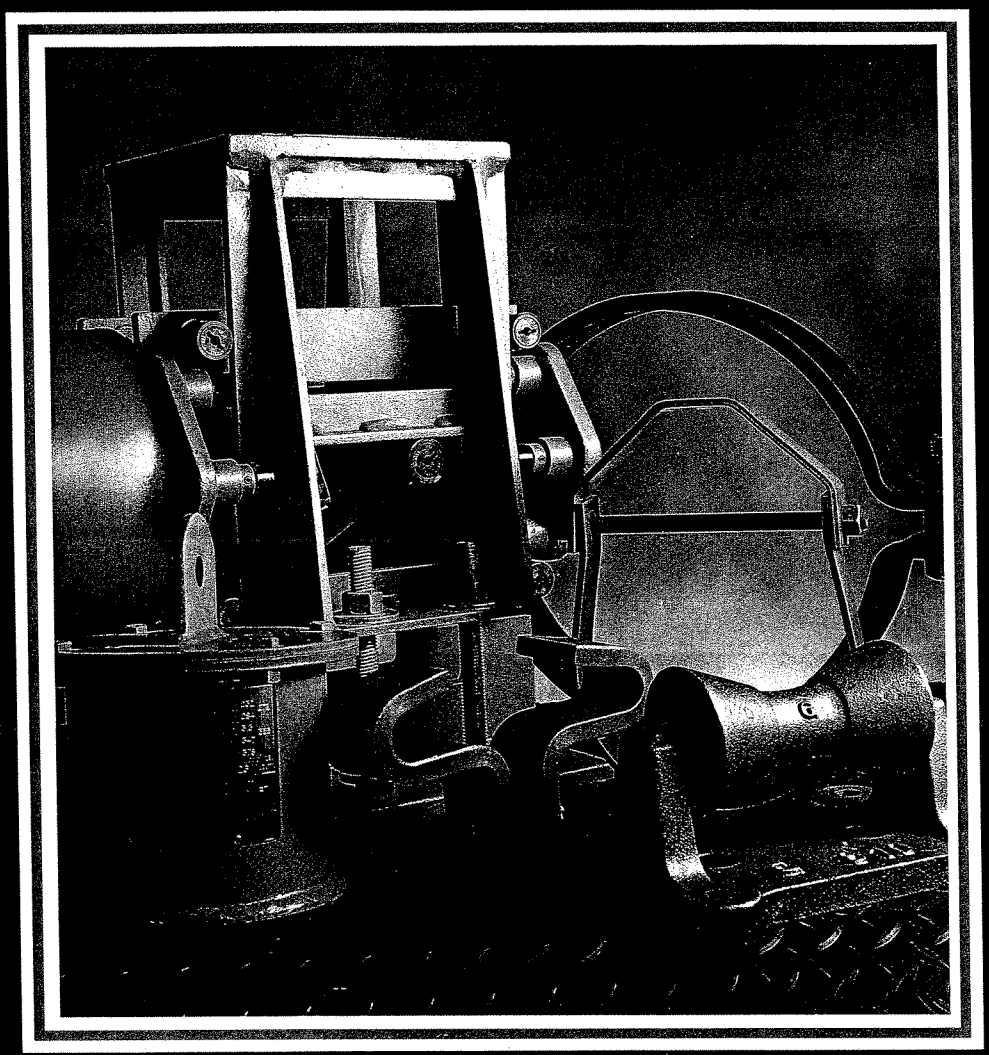

A tyco INTERNATIONAL LTD. COMPANY

27

pipe roll stand
complete: fig. 271
pipe roll and rod: fig. 272
pipe roll only: fig. 273

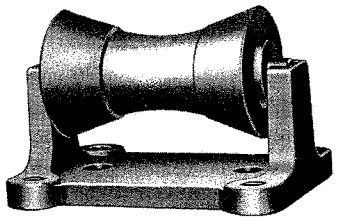

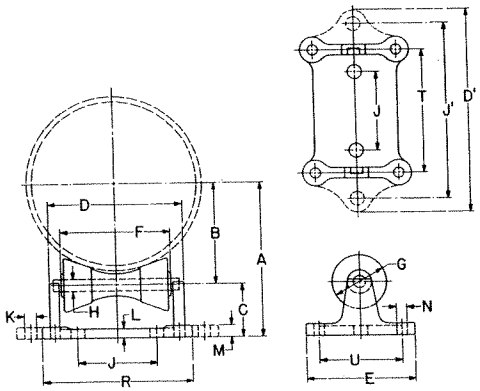

SIZE RANGE: 2 through 42 inch pipe.

MATERIAL: Cast iron roll and stand.

FINISH: Black or galvanized.

SERVICE: For support of pipe where longitudinal movement resulting from expansion and contraction may take place but vertical adjustment is unnecessary.

MAXIMUM TEMPERATURE: 450°F at roller.

APPROVALS: Complies with Federal Specification WW-H-171 E (Type 45) and Manufacturers Standardization Society SP-69 (Type 44).

INSTALLATION:

(1) Two cored holes "K" for anchorage bolts are provided on all sizes for fastening stands to welded stands, to welded steel brackets, structural supports, piers, floors, etc.

(2) In addition, cored holes "N" at the four corners of the stand are provided for anchorage purposes.

(3) The two cored holes "K" on sizes 2 to 6 inch are on outside of stand (see dotted lines and dimension J').

(4) On all other sizes, the holes "K" are inside of uprights (see dimension J).

HOW TO SIZE:

(1) If roll is to support bare pipe, select the size directly from nominal pipe size (see below).

(2) If used with pipe covering protection saddle, see pages ph-74-76 for size of pipe roll.

ORDERING: Specify pipe roll size, figure number, name. Be certain to order oversized rolls where insulation makes this necessary.

NOTE: Standard line of carbon steel base plates available.

loads • weights

pipe size	2 to 3½	4 to 6	8 to 10	12 to 14	16 to 20	24	30	36 to 42
max recom load, lb ■	390	950	2100	3075	4980	6100	7500	12000
complete, fig. 271: wgt (approx) lbs each	6.4	8.9	15.3	28.1	39.7	49.6	99.3	152.0
roll and rod, fig. 272: wgt (approx) lbs each	.9	13.5	5.3	10.1	15.7	19.5	33.9	59.0
roll only, fig. 273: wgt (approx) lbs each	.7	11.0	4.4	8.5	12.7	14.5	24.0	41.0

dimensions (inches)

pipe size	A	B	C	D	D'	E	F	G	H	J	J'	K	L	M	N	R	T	U
2 2½ 3 3½	3½ 3⅞ 4⅛ 4⅜	1¾ 2⅛ 2⅜ 2⅝	1¾	4	8⅜	5⅜	2¾	1⅞	½	...	6⅜	1	9/16	11/16	½	...	3 7/16	4
4 5 6	4 13/16 5 7/16 6 1/16	2¾ 3⅜ 4	2 1/16	5⅜	9⅞	5⅝	3¾	2 1/16	½	...	7⅞	1	¾	⅞	½	...	4 11/16	4¼
8 10	8 11/16 9 13/16	5¼ 6⅜	3 7/16	7¾	...	6⅝	6	3¼	¾	4	...	1	¾	⅞	⅝	8⅝	7	5
12 14	11⅜ 12	7½ 8⅛	3⅞	9⅞	...	7⅞	8	4	⅞	5¾	...	1	¾	⅞	¾	10 15/16	9 1/16	6
16 18 20	13⅝ 14⅝ 15⅝	9⅜ 10⅜ 11⅜	4¼	11¼	...	8⅝	9	4½	1⅛	6¾	...	1	⅞	1	13/16	12⅜	10¼	6½
24	17¾	13⅜	4⅜	12½	...	8⅝	10	4 7/16	1¼	7½	...	1	1	1⅛	13/16	13½	11⅜	6½
30	21⅞	16¾	5⅛	15¾	...	10¾	12½	5½	1¾	10	...	1	1¼	1½	1 1/16	17	14¼	8
36 42	25¾ 28⅞	20 23⅛	5¾	18¾	...	12	15	6⅜	2	12	...	1	1½	1¾	1 5/16	20	17	9

■ Based on roll and stand only

pipe covering protection saddle

for nominal thickness of covering:

1 inch: fig. 160
1½ inch: fig. 161 ←
2 inch: fig. 162
2½ inch: fig. 163
3 inch: fig. 164
4 inch: fig. 165
4 inch (Alloy): fig. 165A
5½ inch (Alloy): fig. 166A

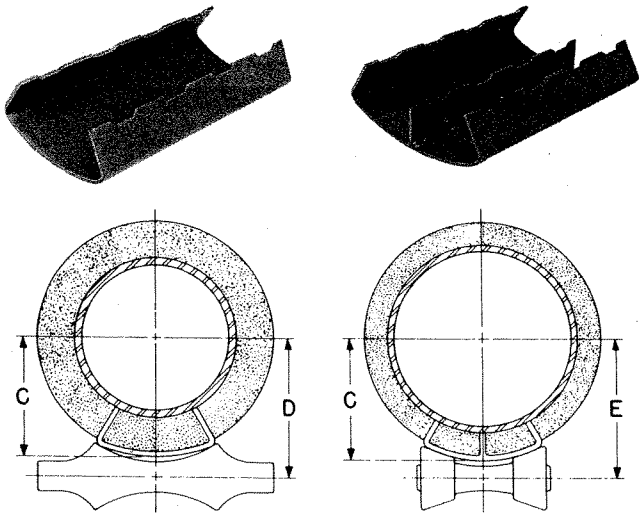

saddle with roll fig. 173 *saddle with roll fig. 273*

SIZE RANGE: For use with ¾ to 36 inch pipe.

MATERIAL: Figs. 160, 161, 162, 163, 164 and 165 are curved carbon steel plate. Figs. 165A and 166A are alloy steel manufactured from ASTM A-387 Grade 22 Chrome Molybdenum steel plate. Figs. 165A and 166A have a welded-in center plate in all sizes. All other saddles have a welded-in center plate for pipe sizes 12 inch and larger. All saddles are 12 inches long with side edges turned up.

SERVICE: Designed for high temperature service or where heat losses are to be kept at a minimum and to protect insulation against damage.

MAXIMUM TEMPERATURE: 650°F Carbon Steel, 950°F Alloy Steel.

APPROVALS: Complies with Federal Specification WW-H-171E (Type 40A or Type 40B) and Manufacturers Standardization Society SP-69 (Type 39A or Type 39B).

FEATURES: Permits finished, weathertight covering at all points of pipe support.

ORDERING: Specify pipe size, figure number, name. Data for 42 inch size available on request.

FINISH: Black.

loads • weights • dimensions (inches)

pipe size	fig. no.	max recom load, lbs	wgt (approx) lbs each	actual thickness of covering	size of pipe roll: figs. 171, 175 177	size of pipe roll: figs. 174, 181	size of pipe roll: figs. 271-277	center line of pipe to outside of saddle C	center line of pipe to center line of roll: D figs. 171, 175 177	center line of pipe to center line of roll: D figs. 174, 181	center line of pipe to center line of roll: E
¾	160•	1200	1.4	⅞	2	2½	2-3½	1⅝	2 1/16	2⅛	2¼
	161•	1200	2.1	1 7/16	3	3½	2-3½	2 3/16	2¾	2¾	2⅞
	162•	1200	2.8	1⅞	4	5	2-3½	2 11/16	3 5/16	3 5/16	3⅜
1	160•	1200	1.4	1 1/16	2½	3	2-3½	1 13/16	2 5/16	2¼	2 7/16
	161•	1200	2.1	1 9/16	3	4	2-3½	2 5/16	2⅞	2⅞	3
	162•	1200	2.8	2⅛	4	5	2-3½	2⅞	3½	3½	3½
1¼	160	1200	1.4	⅞	2½	3	2-3½	1 15/16	2½	2 7/16	2 9/16
	161•	1200	2.1	1⅝	3½	5	2-3½	2 9/16	3 1/16	3 1/16	3 3/16
	162•	1200	2.8	1 15/16	4	5	2-3½	3	3⅝	3⅝	3 11/16
	163•	1200	3.6	2 7/16	5	6	4-6	3¾	4⅜	4⅜	4⅜
1½	160	1200	1.5	1	3	3½	2-3½	2⅛	2⅝	2⅝	2 11/16
	161•	1200	2.1	1½	3½	5	2-3½	2⅝	3¼	3¼	3 5/16
	162•	1800	3.2	2 5/16	5	6	4-6	3 5/16	4	4	3⅞
	163•	1800	3.6	2 13/16	6	8	4-6	3⅞	4½	4⅝	4½
2	160	1200	1.7	1 1/16	3½	4	2-3½	2⅜	3	2 15/16	3 1/16
	161•	1200	2.3	1 9/16	4	5	2-3½	2⅞	3½	3½	3 9/16
	162•	1800	3.2	2⅛	5	6	4-6	3 9/16	4¼	4¼	4 3/16
	163•	1800	3.6	2⅝	6	8	4-6	4 1/16	4¾	4 13/16	4¾
	164•	1800	4.5	3⅛	8	8	4-6	4 9/16	5⅜	5⅜	5¼

continued next page

■ Maximum recommended loads are applicable only when saddle is used on a flat bearing surface and tack welded to pipe. When saddle is used with a pipe roll, the maximum load for the assembly is the smaller of the two loads.
• Saddles may require notching when used with a U-bolt.

Grinnell

protection saddle

29

loads • weights • dimensions (inches) *(continued)*

pipe size	fig. no.	max recom load, lb■	wgt (approx) lbs each	actual thickness of covering	size of pipe roll: figs. 171, 175 177	size of pipe roll: figs. 174, 181	size of pipe roll: figs. 271-277	center line of pipe to outside of saddle, C	center line of pipe to center line of roll, D: figs. 171, 175 177	D: figs. 174, 181	E
2½	160	1200	1.7	1 11/16	3½	5	2- 3½	2 11/16	3¼	3¼	3 5/16
	161•	1200	2.8	1⅞	5	6	4- 6	3 5/16	4	4	3 15/16
	162•	1200	3.2	2 5/16	6	8	4- 6	3⅞	4½	4⅝	4½
	163•	1200	4.1	2⅞	8	8	4- 6	4¼	5⅛	5⅛	5
	164•	1200	4.5	3⅜	8	10	4- 6	4⅞	5⅝	5¾	5½
3	160	1200	1.9	1	4	5	2- 3½	2 15/16	3½	3½	3 9/16
	161	1200	2.8	1 9/16	5	6	4- 6	3⅝	4 5/16	4 5/16	4¼
	162•	1200	3.6	2 1/16	6	8	4- 6	4⅛	4 13/16	4 13/16	4 11/16
	163•	1200	4.1	2 9/16	8	8	4- 6	4 11/16	5 7/16	5 7/16	5 5/16
	164•	1200	4.9	3 1/16	8	10	8-10	5 1/16	6	6	6 1/16
3½	160	1200	2.3	1¼	5	6	4- 6	3 5/16	4	4	3 15/16
	161	1200	3.2	1 13/16	6	8	4- 6	3 11/16	4 9/16	4 9/16	4½
	162•	1200	3.6	2¼	8	8	4- 6	4 5/16	5⅛	5⅛	5
	163•	1200	4.5	2¾	8	10	8-10	4 11/16	5⅝	5⅝	5 11/16
	164•	1200	4.9	3 5/16	10	10	8-10	5⅜	6 5/16	6 5/16	6⅜
4	160	1200	2.3	1 1/16	5	6	4- 6	3 9/16	4¼	4¼	4 3/16
	161	1200	3.2	1 9/16	6	8	4- 6	4 1/16	4⅞	4⅞	4¾
	162	1200	3.6	2 1/16	8	8	4- 6	4 9/16	5⅜	5⅜	5¼
	163	1200	4.5	2 9/16	8	10	8-10	5	5 15/16	5 15/16	6
	164•	1200	4.9	3 1/16	10	10	8-10	5⅝	6 9/16	6 9/16	6⅝
	165•	1200	6.1	4 1/16	10	12	12-14	6½	7⅝	7⅝	7 9/16
	165A•	7200	11.6	4 1/16	10	12	12-14	6½	7⅝	7⅝	7 9/16
	166A•	7200	15.7	5 11/16	14	16	12-14	8⅛	9⅝	9½	9 5/16
5	160	1200	2.3	1	6	8	4- 6	4⅛	4 13/16	4 13/16	4¾
	161	1200	3.2	1½	8	8	4- 6	4 11/16	5½	5½	5⅜
	162	1200	3.6	2	8	10	8-10	5 3/16	6	6 1/16	6⅛
	163	1200	4.5	2 9/16	10	10	8-10	5⅝	6 9/16	6 9/16	6⅝
	164	1200	4.9	3 1/16	10	12	8-10	6 3/16	7⅛	7¼	7¼
	165•	1200	6.1	4 3/16	12	14	12-14	7⅛	8 3/16	8⅜	8 3/16
	165A•	7200	11.6	4 3/16	12	14	12-14	7⅛	8⅛	8⅜	8 3/16
	166A•	7200	15.7	5 11/16	16	16	12-14	8 11/16	10 1/16	10 1/16	9⅞
6	160	1800	3.8	1	8	8	4- 6	4½	5⅜	5⅜	5¼
	161	1800	4.4	1½	8	10	8-10	5 1/16	5⅞	5 11/16	6
	162	1800	5.7	2	10	10	8-10	5½	6 7/16	6 7/16	6½
	163	1800	6.5	2½	10	12	8-10	6 3/16	7⅛	7 3/16	7¼
	164	1800	7.7	3	12	12	8-10	6 9/16	7⅝	7⅝	7⅝
	165•	1800	10.2	4⅛	14	16	12-14	7 9/16	9	9	8¾
	165A•	7200	12.9	4⅛	14	16	12-14	7⅝	9⅛	9	8 13/16
	166A•	7200	16.3	5⅝	16	18	16-20	9⅛	10⅝	10 9/16	10 7/16
8	161	1800	5.8	1½	10	12	8-10	6	7 1/16	7 1/16	7 1/16
	162	1800	6.3	2	10	12	8-10	6½	7 9/16	7 9/16	7 9/16
	163	1800	7.2	2 11/16	12	14	8-10	7¼	8 5/16	8½	8 5/16
	164	1800	7.7	3⅛	14	16	12-14	7 11/16	9	9	8¾
	165	1800	10.2	4 3/16	16	18	16-20	8 11/16	10⅛	10⅛	9⅞
	165A	7200	16.9	4 3/16	16	18	16-20	8 11/16	10 1/16	10⅛	9⅞
	166A•	7200	22.6	5⅝	18	20	16-20	10¼	11⅞	11 13/16	11⅝
10	161	1800	5.8	1 9/16	12	14	8-10	7¼	8 5/16	8½	8 5/16
	162	1800	7.7	2 1/16	14	16	12-14	7⅝	9 1/16	9	8 13/16
	163	1800	8.2	2 9/16	14	16	12-14	8⅛	9 9/16	9 9/16	9 5/16
	164	1800	8.8	3 1/16	16	18	16-20	8 11/16	10⅛	10 1/16	10
	165	1800	10.8	4 1/16	18	20	16-20	9¾	11¼	11¼	11⅛
	165A	7200	18.9	4 1/16	18	20	16-20	9 11/16	11 5/16	11¼	11⅛
	166A•	7200	24.3	5 9/16	20	...	22-24	11⅛	12 15/16	...	12½

continued next page

■ Maximum recommended loads are applicable only when saddle is used on a flat bearing surface and tack welded to pipe. When saddle is used with a pipe roll, the maximum load for the assembly is the smaller of the two loads.
• Saddles may require notching when used with a U-bolt.

loads • weights • dimensions (inches) *(continued)*

pipe size	fig. no.	max recom load, lb■	wgt (approx) lbs each	actual thickness of covering	size of pipe roll: figs. 171 177	size of pipe roll: fig. 181	size of pipe roll: figs. 271-277	center line of pipe to outside of saddle, C	center line of pipe to center line of roll D: figs. 171, 177	center line of pipe to center line of roll D: fig. 181	center line of pipe to center line of roll E
12	161	5000	7.8	1 9/16	14	16	12-14	8 1/16	9 1/2	9 1/2	9 1/4
	162	5000	9.9	2 1/16	16	18	16-20	8 5/8	10 3/16	10 1/16	10
	163	5000	10.5	2 5/8	16	18	16-20	9 1/8	10 11/16	10 9/16	10 1/2
	164	5000	11.4	3 1/16	18	20	16-20	9 5/8	11 1/8	11 1/8	11
	165	5000	14.0	4 1/8	20	...	16-20	10 13/16	12 3/8	...	12 3/16
	165A	11140	28.0	4 1/8	20	...	16-20	11	12 1/2	...	12 3/8
	166A	11140	35.5	5 9/16	24	...	22-24	12 5/16	14 1/4	...	13 11/16
14	161	5000	7.8	1 1/2	16	18	12-14	8 3/4	10 3/16	10 1/8	10 1/16
	162	5000	9.9	2	16	18	16-20	9 5/15	10 7/8	10 13/16	10 11/16
	163	5000	10.5	2 1/2	18	20	16-20	9 7/8	11 5/16	11 3/8	11 3/16
	164	5000	11.4	3	18	20	16-20	10 5/16	11 3/4	11 3/4	11 5/8
	165	5000	14.0	4	20	...	22-24	11 5/16	12 7/8	...	12 5/8
	165A	11140	27.6	4	20	...	22-24	11 9/16	13 1/16	...	12 7/8
	166A	11140	35.5	5 1/2	24	...	22-24	12 7/8	14 3/4	...	14 1/4
16	161	5000	8.4	1 1/2	18	20	16-20	9 13/16	11 1/4	11 1/4	11 1/8
	162	5000	10.4	2	18	20	16-20	10 3/16	11 3/16	11 3/4	11 9/16
	163	7200	11.1	2 1/2	20	...	16-20	10 13/16	12 5/16	...	12 3/16
	164	7200	13.3	3	24	...	22-24	11 1/16	12 7/8	...	12 7/16
	165	7200	15.3	4	24	...	22-24	12 3/16	14 1/8	...	13 5/8
	165A	11140	30.1	4	24	...	22-24	12 7/16	14 5/16	...	13 7/8
	166A	11140	40.0	5 1/2	30	...	26-30	13 13/16	16 5/8	...	15 5/8
18	161	5000	9.1	1 1/2	20	...	16-20	10 13/16	12 5/16	...	12 3/16
	162	7200	10.4	2	20	...	22-24	11 5/16	12 7/8	...	12 11/16
	163	7200	12.4	2 1/2	24	...	22-24	11 5/8	13 9/16	...	13 1/16
	164	7200	13.3	3	24	...	22-24	12 1/4	14 3/16	...	13 5/8
	165	7200	15.3	4	24	...	22-24	13 5/16	15 1/4	...	14 3/4
	165A	13370	40.3	4	24	...	22-24	13 3/4	15 11/16	...	15 1/8
	166A	13370	52.1	5 1/2	30	...	26-30	14 7/8	17 5/8	...	16 5/8
20	161	7200	10.4	1 1/2	24	...	22-24	11 5/8	13 9/16	...	13 1/16
	162	7200	11.6	2	24	...	22-24	12 1/4	14 1/8	...	13 5/8
	163	7200	12.4	2 1/2	24	...	22-24	12 3/4	14 11/16	...	14 3/16
	164	7200	13.4	3	24	...	22-24	13 5/16	15 1/4	...	14 3/4
	165	7200	22.8	4	30	...	26-30	14 1/8	17	...	15 7/8
	165A	13370	44.8	4	30	...	26-30	14 3/8	17 3/16	...	16 1/8
	166A	13370	52.1	5 1/2	30	...	26-30	16 1/8	18 15/16	...	17 7/8
24	161	7200	12.3	1 1/2	30	...	26-30	13 1/2	16 5/16	...	15 1/4
	162	7200	13.4	2	30	...	26-30	14	16 7/8	...	15 3/4
	163	7200	14.3	2 1/2	30	...	26-30	14 5/8	17 1/2	...	16 7/16
	164	7200	20.3	3	30	...	26-30	15 1/4	18 1/16	...	17
	165	7200	23.1	4	30	...	26-30	16 7/16	19 1/4	...	18 3/16
	165A	13370	45.4	4	30	...	26-30	16 11/16	19 1/2	...	18 7/16
	166A	13370	52.1	5 1/2	...	...	26-30	18	...	...	19 3/4
30	161	7200	13.3	1 1/2	...	...	36-42	16 15/16	...	...	18 7/8
	162	7200	14.0	2	...	...	36-42	17 1/2	...	...	19 3/8
	163	7200	20.0	2 1/2	...	...	36-42	18 1/16	...	...	19 15/16
	164	7200	21.4	3	...	...	36-42	18 5/8	...	...	20 1/2
	165	7200	24.0	4	...	...	36-42	19 11/16	...	...	21 1/2
	165A	13370	47.9	4	...	...	36-42	19 15/16	...	...	21 3/4
	166A	13370	55.6	5 1/2	...	...	36-42	21 1/2	...	...	23 3/8
36	161	7200	18.0	1 1/2	...	...	36-42	20 1/4	...	...	22 1/8
	162	7200	18.9	2	...	...	36-42	20 15/16	...	...	22 5/8
	163	7200	20.2	2 1/2	...	...	36-42	21 5/16	...	...	23 3/16
	164	7200	21.6	3	...	...	36-42	21 7/8	...	...	23 11/16
	165	7200	24.1	4	...	...	36-42	22 7/8	...	...	24 11/16
	165A	13370	48.3	4	...	...	36-42	23 1/8	...	...	25
	166A	13370	55.8	5 1/2	...	...	36-42	24 5/8	...	...	26 1/2

■ Maximum recommended loads are applicable only when saddle is used on a flat bearing surface and tack welded to pipe. When saddle is used with a pipe roll, the maximum load for the assembly is the smaller of the two loads.
• Saddles may require notching when used with a U-bolt.

*UFS beam clamp with weldless eye nut right-hand thread: fig. 292 left-hand thread: fig. 292L

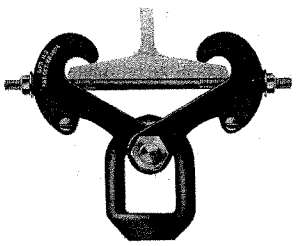

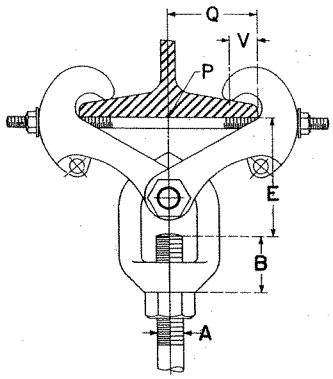

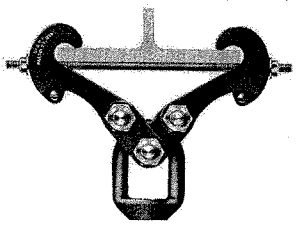

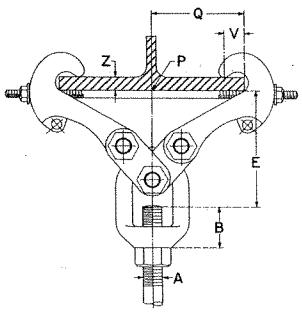

MATERIAL: Forged steel.

FINISH: Black or galvanized.

SERVICE: For suspension of heavy loads from American Standard I-beams and wide flange beams with flange widths to 15 inches and flange thickness to 1.031.

APPROVALS: Complies with Federal Specification WW-H-171E (Type 28 without links; Type 29 with links) and Manufacturers Standardization Society SP-69 (Type 28 without links; Type 29 with links).

INSTALLATION: Fit jaws over edges of lower beam flange and tighten nuts on tie rod to lock clamp in place.

FEATURES:
- Weldless eye nut provides for horizontal pipe movement without binding.
- Weldless eye nut is furnished tapped to any specified size up to the maximum rod size.
- Tie rod assures a tight non-slip fit to the beam.

ORDERING: Specify clamp size, figure number, name, rod size.

NOTE: The application of a load to a structural beam by means of a beam clamp produces a transverse stress, perpendicular to the axis of the beam, in the flange to which the load is applied.

Size per load, beam flange width and rod size

*UFS - Universal Forged Steel

loads • weights • dimensions (inches)

clamp size no.	maximum rod size A	maximum recommended load, lb■	weight (approximate) lbs each	maximum beam flange thickness	B	V	jaw and eye nut size
1	¾	2710	3.9	.60	1¼		292 — 1/1
2	1	4960	9.2	.60	1 11/16	1⅛	292 — 2/2
3•	1	4960	13.0	.60	1 11/16		292 — 2/2
4	1	4960	21.7	1.031	1½		292 — 3/2
5•	1	4960	33.9	1.031	1½	1⅛	292 — 3/2
6	1½	11500	23.9	1.031	2⅛		292 — 3/3
7•	1½	11500	35.8	1.031	2⅛		292 — 3/3
8	2	11500	36.8	1.031	4 9/16	1⅛	292 — 3/4

For reference only. Order by clamp size.

■ Based on the allowable stresses shown in the ASME Code for Pressure Piping.

rod take-out (inches)

clamp size no.	rod take-out, E for width of beam flange 3	4	5	6	7	8	9	10	11	12	13	14	15
1	4½	4 5/16	4 1/16	3⅝	2⅞	....	....	....	....	....	....	....	....
2	....	4¾	4 7/16	4 1/16	3⅜	....	....	....	....	....	....	....	....
3•	....	....	....	....	5 15/16	6	5 5/16	5	....	....	....	....	....
4	....	6 13/16	6⅝	6⅜	5⅞	5⅞	5⅜	4 13/16	....	....	....	....	....
5•	....	....	....	....	....	....	....	....	8⅛	7¾	7⅛	6⅝	6 1/16
6	....	7 3/16	7	6¾	6¼	6 5/16	5 13/16	5 3/16	....	....	....	....	....
7•	....	....	....	....	....	....	....	....	8½	8⅛	7½	7	6 7/16
8	....	8⅝	8 7/16	8 3/16	7¾	7¾	7¼	6⅝	....	....	....	....	....

•Furnished with links.
*Note: See page ph-163 for load capacity of rod.

structural welding lug
fig. 55

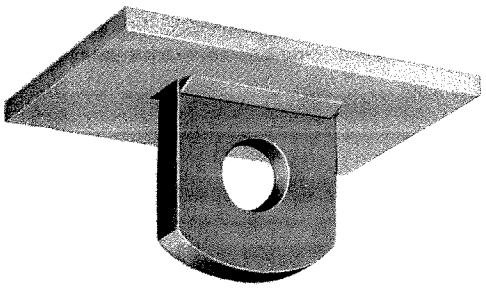

SIZE RANGE: Short lug is available for use with ½ through 3¾ inch rod; long lug may be used with ½ through 2 inch rod.

MATERIAL: Carbon Steel.

FINISH: Black.

SERVICE: For attachment to structural steel in conjunction with the Fig. 299 clevis and with type B and C spring hanger.

APPROVALS: Complies with Manufacturers Standardization Society SP-69 (Type 57).

ORDERING: Specify rod size, figure number, name and whether short or long lug is required.

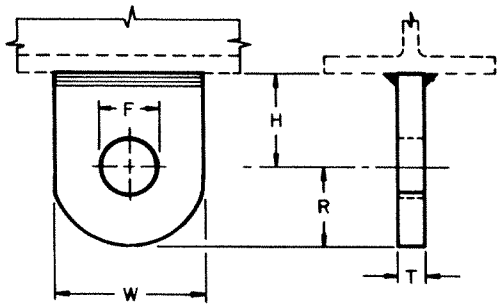

loads • weights • dimensions (inches)

rod size (inches)	maximum recommended load, lb▪		wgt (approx) lbs each		pin or bolt	F	rod take out H		R	T	W
	short	long	short	long			short	long			
½	1130	1130	.48	.75	⅝	11/16	1½	3	1¼	¼	2½
⅝	1810	1810	.41	.68	¾	13/16	1½	3	1¼	¼	2½
¾	2710	2710	.60	1.0	⅞	15/16	1½	3	1¼	⅜	2½
⅞	3770	3770	.71	.98	1	1⅛	2	3	1¼	⅜	2½
1	4960	4960	1.2	1.6	1⅛	1¼	2	3	1½	½	3
1¼	8000	8000	3.0	3.7	1⅜	1½	3	4	2	⅝	4
1½	11630	11630	4.8	6.4	1⅝	1¾	3	4½	2½	¾	5
1¾	15700	15700	4.7	6.3	1⅞	2	3	4½	2½	¾	5
2	20700	20700	7.2	8.8	2¼	2⅜	4	4½	3	¾	6
2¼	27200	...	7.6	...	2½	2⅝	4½	...	3	¾	6
2½	33500	...	15.5	...	2¾	2⅞	4½	...	4	1	8
2¾	41580	...	15.1	...	3	3⅛	4½	...	4	1	8
3	50580	...	16.0	...	3¼	3⅜	5	...	4	1	8
3¼	60480	...	18.9	...	3½	3⅝	5	...	4½	1	9
3½	71280	...	31.3	...	3¾	3⅞	6	...	4½	1½•	9
3¾	82890	...	35.9	...	4	4⅛	6	...	4½	1¾•	9

▪ Based on the allowable stresses shown in the ASME Code for Pressure Piping.

TOLCO
INCORPORATED
CORONA, CA (909)737-5599

Fig. 98
Rod Stiffener

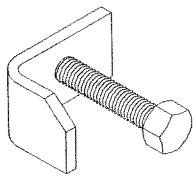

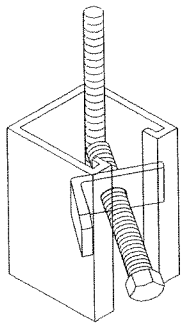

Size Range—Secures 3/8 thru 7/8 inch hanger rod.
Material – Carbon Steel.
Function—Secures channel to hanger rod for vertical seismic bracing.
Finish—Electro Galvanized.
Order By—Figure number.
Note—Available in HDG finish or Stainless Steel materials.

Fig. 99
All Thread Rod Cut To Length

Size Range—3/8 thru 7/8 inch rod in 1 inch increments.
Material – Carbon Steel.
Maximum Temperature—750°F.
Finish— Plain.
Order By—Figure number, rod diameter, rod length, and finish.
Note—Available in Electro-Galvanized and HDG finish or Stainless Steel materials.

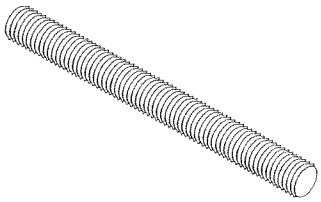

ROD SIZE	MAX. REC. LOAD LBS. FOR SERVICE TEMPS 650°F	750°F
3/8	610	540
1/2	1130	1010
5/8	1810	1610
3/4	2710	2420
7/8	3770	3360

Fig. 100
All Thread Rod Full Lengths

Size Range—3/8 thru 7/8 inch rod in 10 foot lengths.
Material – Carbon Steel.
Maximum Temperature—750°F.
Finish— Plain.
Order By—Figure number, rod diameter, and finish.
Note—Available in Electro-Galvanized and HDG finish or Stainless Steel materials.

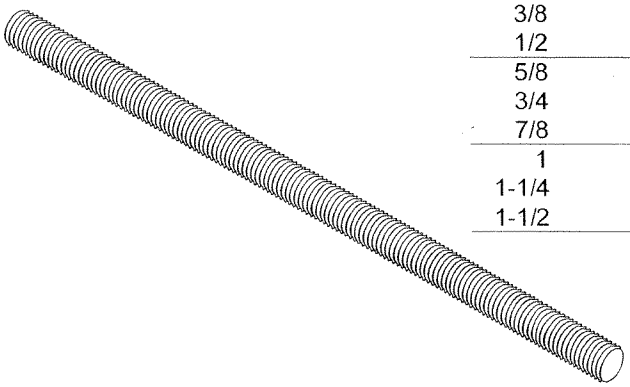

ROD SIZE	MAX. REC. LOAD LBS. FOR SERVICE TEMPS 650°F	750°F	APPROX. WEIGHT PER 100FT.
1/4	240	215	12
3/8	610	540	29
1/2	1130	1010	53
5/8	1810	1610	84
3/4	2710	2420	123
7/8	3770	3360	169
1	4960	4420	222
1-1/4	8000	7140	360
1-1/2	11630	10370	510

TOLCO
INCORPORATED
CORONA, CA (909)737-5599

Fig. 113 Standard Hex Nut

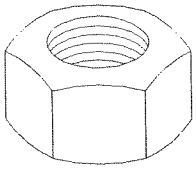

Size Range—1/4 thru 1-1/2 inch.
Material—Carbon Steel.
Finish—Plain.
Note—Available in Electro-Galvanized and HDG finish or Stainless Steel materials.
Order By—Figure number, size, and finish.

ROD SIZE	WIDTH ACROSS FLATS	WIDTH ACROSS POINTS	THICKNESS	APPROX. WT./100
1/4	7/16	1/2	7/32	.7
5/16	1/2	37/64	17/64	1.1
3/8	9/16	21/32	21/64	1.6
1/2	3/4	55/64	7/16	3.7
5/8	15/16	1-3/32	35/64	7.3
3/4	1-1/8	1-5/16	41/64	12
7/8	1-5/16	1-33/64	3/4	19
1	1-1/2	1-3/4	55/64	28
1-1/4	1-7/8	2-11/64	1-1/16	54
1-1/2	2-1/4	2-19/32	1-9/32	94

Fig. 114 Heavy Hex Nut

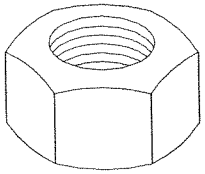

Size Range—1/4 thru 1-1/2 inch.
Material—Carbon Steel.
Finish—Plain.
Note—Available in Electro-Galvanized and HDG finish or Stainless Steel materials.
Order By—Figure number, size, and finish.

ROD SIZE	WIDTH ACROSS FLATS	WIDTH ACROSS POINTS	THICKNESS	APPROX. WT./100
1/4	1/2	37/64	15/64	1.2
5/16	9/16	21/32	19/64	1.7
3/8	11/16	51/64	23/64	3.1
1/2	7/8	1-1/64	31/64	6.5
5/8	1-1/16	1-15/64	39/64	12
3/4	1-1/4	1-29/64	47/64	19
7/8	1-7/16	1-21/32	55/64	30
1	1-5/8	1-7/8	63/64	43
1-1/4	2	2-5/16	1-7/32	79
1-1/2	2-3/8	2-3/4	1-15/32	131

Fig. 115 Flat Washer

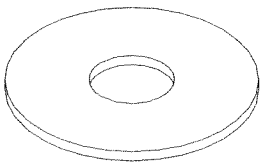

Size Range—1/4 thru 1-1/2 inch bolt.
Material—Carbon Steel.
Finish—Plain.
Note—Available in Electro-Galvanized and HDG finish or Stainless Steel materials.
Order By—Figure number, size, and finish.

ROD SIZE	OUTSIDE DIAMETER	APPROX. WT./100
1/4	3/4	.7
3/8	1	1.5
1/2	1-3/8	3.9
5/8	1-3/4	7.7
3/4	2	11
7/8	2-1/4	15
1	2-1/2	19
1-1/8	2-3/4	22
1-1/4	3	26
1-1/2	3-1/2	39

Fig. 117 Lock Washer

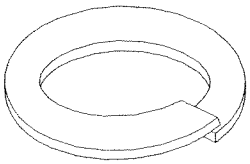

Size Range—3/8 thru 3/4 inch bolt.
Material—Carbon Steel.
Finish—Plain.
Note—Available in Electro-Galvanized and HDG finish or Stainless Steel materials.
Order By—Figure number, size, and finish.

ROD SIZE	OUTSIDE DIAMETER	APPROX. WT./100
3/8	11/16	.6
1/2	7/8	1.3
5/8	1-1/6	2.4
3/4	1-1/4	4.0

TOLCO
INCORPORATED
CORONA, CA (909)737-5599

Fig. 116
Bevel Washer

Size Range—3/8 thru 7/8 inch bolt.
Material—Malleable Iron.
Function—Designed to match taper of flange of I-beam or channel to permit right angle fastening of bolt.
Finish—Plain.
Note—Available in Electro-Galvanized and HDG finish or Stainless Steel materials.
Order By—Figure number, size, and finish.

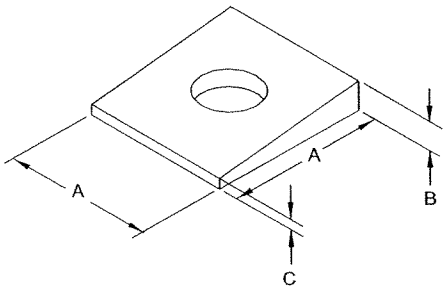

BOLT SIZE	A	B	C	APPROX. WT./100
3/8	1-1/4	11/32	5/32	9
1/2	1-1/4	11/32	5/32	9
5/8	1-1/2	13/32	5/32	14
3/4	1-1/2	15/32	7/32	16
7/8	2	9/16	7/32	33

Fig. 118
Square Washer

Size Range—3/8 thru 1 inch bolt.
Material—Carbon Steel.
Function—Heavy duty washer for use on top of channels or angles to support hanger rod.
Finish—Plain.
Note—Available in Electro-Galvanized and HDG finish or Stainless Steel materials.
Order By—Figure number, size, and finish.

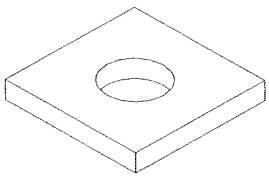

ROD SIZE	HOLE SIZE	APPROX. WT./100
3/8	7/16	27
1/2	9/16	27
5/8	11/16	47
3/4	13/16	42
7/8	15/16	85
1	1-1/8	160

Fig. 119
Fender or Oversized Washer

Size Range—1/4 thru 1/2 inch bolt.
Material—Carbon Steel.
Function—To provide a greater bearing surface than standard washer.
Finish—Electro-Galvanized.
Order By—Figure number and size.

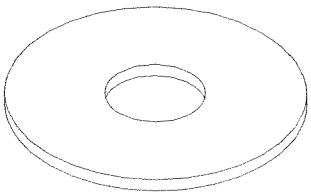

ROD SIZE	INSIDE DIAMETER	OUTSIDE DIAMETER	APPROX. WT./100
1/4	5/16	1-1/2	3.3
3/8	7/16	1-1/2	3.0
1/2	9/16	2	2.8

TOLCO
INCORPORATED
CORONA, CA (909)737-5599

Fig. 982
Cable Sway Brace Attachment

Size Range – One size fits 1/8 thru 1/4 inch pre-stretched cable.
Material – Carbon Steel.
Function – Multi-functional attachment for sway bracing; attaches sway brace to structure or to hanger. To be used with 7 x 19 strand core pre-stretched galv. aircraft cable and cable clamps (sold separately) as shown in the details below.
Features— Attachment will fit multiple sizes of cable. Will mount to any surface angle.
Finish – Electro-Galvanized.
Order By – Figure number, hole size and finish.

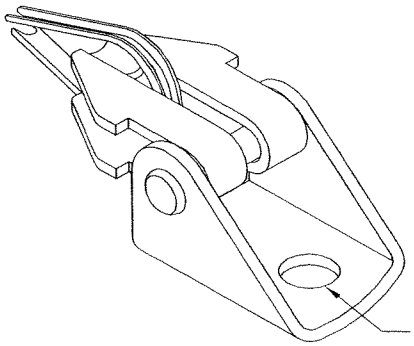

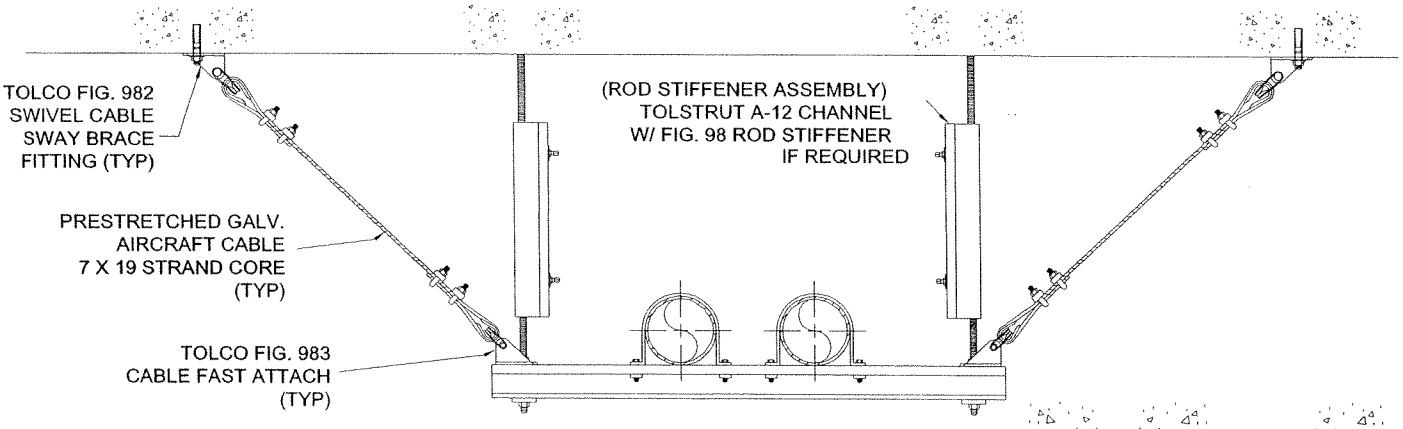

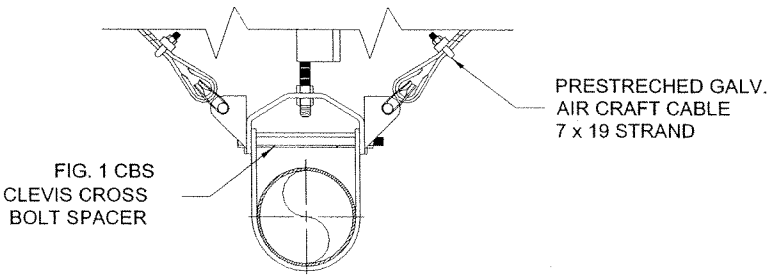

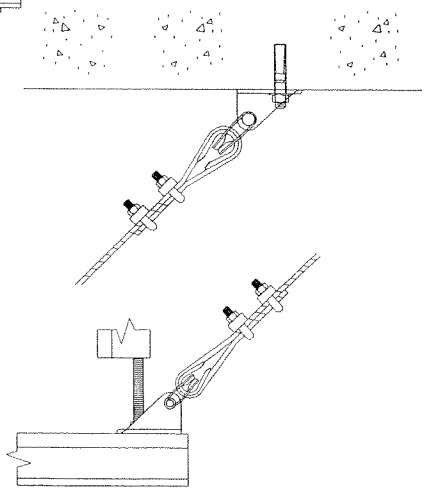

Cable Diameter	Maximum Load Lbs.
1/8"	975*
3/16"	2050*
1/4"	2589

*Maximum load rating based on cable breaking strength

UNITED STATES

UNISTRUT®

GENERAL ENGINEERING CATALOG

UNISTRUT ALL PURPOSE METAL FRAMING

UNISTRUT
NEW MEXICO
P.O. Box 3128 — Zip Code 87190
4820 Pan American Hwy., N.E.
Albuquerque, N.M. 87109
Phone: (505) 881-0264

NO. 10 R

P 1000® CHANNEL AND COMBINATIONS 38

1⅝" UNISTRUT CHANNEL WIDTH SERIES

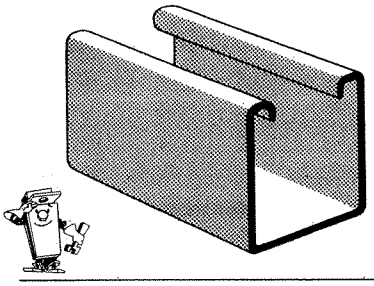

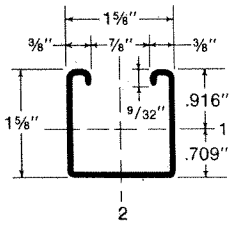

WT. LBS./C 190

P 1000 channel and combinations are roll formed from 12 gauge (.105") strip steel.

Standard lengths 10 and 20 feet.

P 1000 CHANNEL

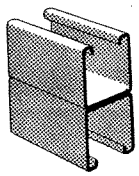

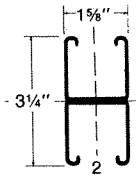

WT. LBS./C 380

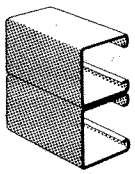

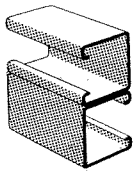

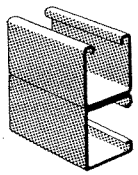

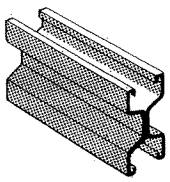

P 1001 **P 1001 A** **P 1001 B** **P 1001 C** **P 1001 K**

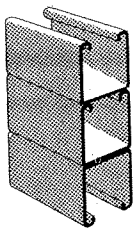

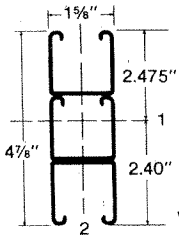

WT. LBS./C 570

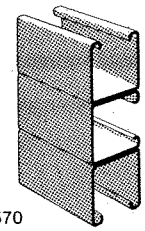

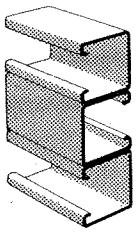

P 1001 3 **P 1001 A3** **P 1001 B3**

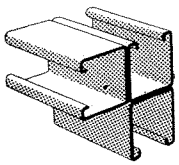

WT. LBS./C 570

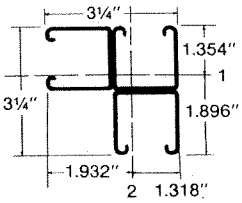

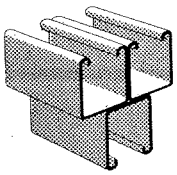

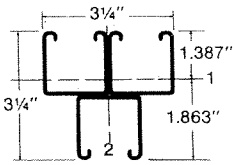

WT. LBS./C 570

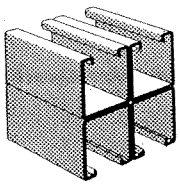

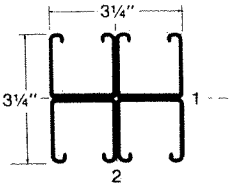

WT. LBS./C 760

P 1001 C3 **P 1001 D3** **P 1001 C41**

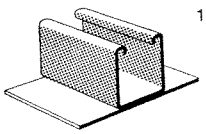

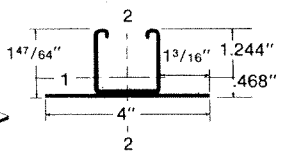

WT. LBS./C 335

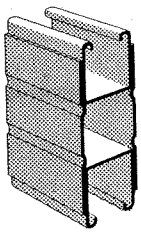

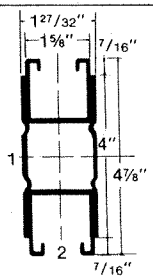

WT. LBS./C 670

P 1003 **P 1004 A**

BEAM LOADS

Allowable uniformly distributed loads are listed for various simple spans, that is, beam on two supports. If load is concentrated at center of span, multiply load from table by 0.5 and corresponding deflection by 0.8.

Stress 25,000 #/sq. in. — Recommended for use where deflection is not a factor on long spans.

Deflection 1/240 span — Recommended for use when deflection is a factor.

COLUMN LOADS

Column loadings are for allowable axial loads for the unsupported heights listed and include a K value of 0.80. For other K values see page 112. If loads are eccentric, loads should be reduced according to standard practice.

P 1000® CHANNEL AND COMBINATIONS

1⅝" UNISTRUT CHANNEL WIDTH SERIES

NOTE: "Long span deep beams should be supported in a manner to prevent rotation at supports and tied between supports to prevent twist."

39

BEAM AND COLUMN DATA

BEAM SPAN OR UNBRACED HEIGHT	CHANNEL	UNIFORM LOAD @ 25000 PSI	DEFLECTION @ 25000 PSI	UNIFORM LOAD @ 20000 PSI	DEFLECTION @ 20000 PSI	UNIFORM LOAD @ DEFLECTION = 1/240 SPAN	MAX. LOAD OF COLUMN LOADED @ C.G.	MAX. LOAD OF COLUMN LOADED @ SLOT FACE
24"	P1000	1690	.06	1350	.04	—	9800	4000
	P1001	2480*	.02	2480*	.02	—	22500	6200
	P1001C41	4970*	.02	4970*	.02	—	45700	12500
	P1004A	5860*	.01	5860*	.01	—	45800	12000
	P1001K	2550	.02	2550	.02	—	23000	7100
36"	P1000	1130	.12	900	.10	—	8200	3700
	P1001	2480*	.05	2480*	.05	—	21600	6100
	P1001C41	4970*	.05	4970*	.05	—	44800	12300
	P1004A	5860*	.03	5860*	.03	—	43500	11900
	P1001K	2550	.05	2550	.05	—	21000	6700
48"	P1000	850	.22	680	.18	760	6500	3500
	P1001	2380	.13	1900	.10	—	20400	5900
	P1001C41	4770	.13	3820	.10	—	43600	12000
	P1004A	5680*	.07	5550	.07	—	40800	11600
	P1001K	2550	.13	2050	.10	—	18600	6100
60"	P1000	680	.35	540	.28	490	5000	2700
	P1001	1900	.20	1520	.16	—	18900	5600
	P1001C41	3820	.20	3050	.16	—	42000	11500
	P1004A	5550	.13	4440	.10	—	37800	11300
	P1001K	2050	.19	1650	.16	—	15900	5100
72"	P1000	560	.50	450	.40	340	4000	2100
	P1001	1590	.28	1270	.23	—	17000	5100
	P1001C41	3180	.28	2540	.23	—	40000	11100
	P1004A	4630	.19	3700	.15	—	34500	10700
	P1001K	1700	.28	1370	.23	—	12800	4000
84"	P1000	480	.68	390	.54	250	3400	1800
	P1001	1360	.38	1090	.31	1240	14800	4600
	P1001C41	2730	.38	2180	.31	2490	37800	10500
	P1004A	3970	.26	3170	.20	—	30800	9900
	P1001K	1450	.38	1180	.31	1350	9600	3200
96"	P1000	420	.89	340	.71	190	2900	1600
	P1001	1190	.50	950	.40	950	12300	4000
	P1001C41	2380	.50	1910	.40	1900	35100	10000
	P1004A	3470	.33	2780	.27	—	26800	9000
	P1001K	1300	.50	1050	.40	1050	7400	2500
108"	P1000	380	1.12	300	.90	150	2600	1400
	P1001	1060	.63	850	.51	750	9700	3400
	P1001C41	2120	.63	1700	.51	1500	32200	9300
	P1004A	3080	.42	2470	.34	—	22500	7900
	P1001K	1150	.63	920	.51	810	5800	**
120"	P1000	340	1.39	270	1.11	120	2200	1200
	P1001	950	.78	760	.63	610	7900	2900
	P1001C41	1910	.78	1530	.63	1220	28800	8700
	P1004A	2780	.52	2220	.42	2660	18300	6900
	P1001K	1050	.78	820	.63	660	4700	**

*LOAD LIMITED BY SPOT WELD SHEAR **$\frac{KL}{r}$ EXCEEDS (200)

ELEMENTS OF SECTION

CHANNEL	WT./FT. LBS.	AREA OF SECTION SQ. IN.	AXIS 1-1 I In.⁴	AXIS 1-1 S In.³	AXIS 1-1 r In.	AXIS 2-2 I In.⁴	AXIS 2-2 S In.³	AXIS 2-2 r In.
P 1000	1.90	.555	.186	.203	.579	.239	.294	.655
P 1003	3.35	.975	.325	.261	.577	.799	.400	.905
P 1001	3.80	1.110	.930	.572	.915	.478	.588	.656
P 1001 D3	5.70	1.665	1.302	.699	.844	1.450	.892	.933
P 1001 C3	5.70	1.665	1.413	.745	.921	1.521	.788	.956
P 1001 C41	7.60	2.220	1.860	1.145	.915	2.422	1.490	1.044
P 1001 3	5.70	1.665	3.132	1.267	1.371	.717	.882	.656
P 1004 A	6.70	1.950	4.062	1.666	1.443	1.107	1.207	.754
P 1000 K	3.50	1.026	1.005	.618	.989	.286	.352	.528

I — Moment of Inertia S — Section Modulus r — Radius of Gyration

STRENGTH OF P 1010 NUTS USED IN P 1000 CHANNEL

Resistance to Slip — 1500 Lbs. per bolt
Pull Out Strength — 2000 Lbs. per bolt
Minimum Safety Factor of 3

P 5000™ CHANNEL AND COMBINATIONS

40

1⅝" UNISTRUT CHANNEL WIDTH SERIES

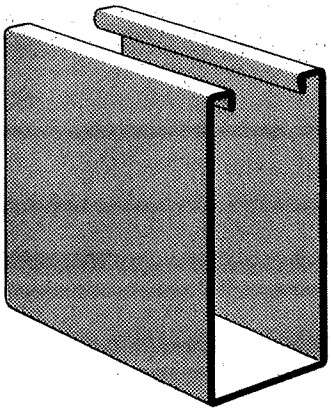

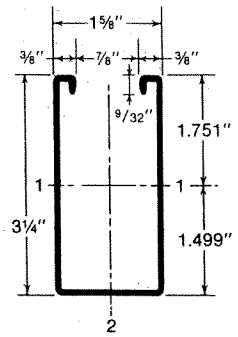

WT. LBS./C FT. 305

P 5000 channel and combinations are roll formed from 12 gauge (.105") strip steel.

Standard lengths 10 and 20 feet.

P 5000 CHANNEL

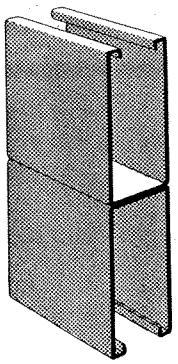

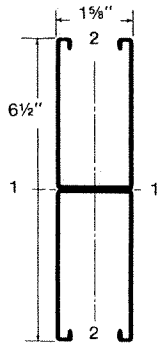

WT. LBS./C FT. 610

P 5001

BEAM LOADS

Allowable uniformly distributed loads are listed for various simple spans, that is, beam on two supports. If load is concentrated at center of span, multiply load from table by 0.5 and corresponding deflection by 0.8.

Stress 20,000 #/sq. in — Recommended for use where deflection is not a factor on long spans.
Deflection 1/240 span — Recommended for use when deflection is a factor.

COLUMN LOADS

Column loadings are for allowable axial loads for the unsupported heights listed and include a K value of 0.80. For other K values see page 112. If loads are eccentric, loads should be reduced according to standard practice.

ELEMENTS OF SECTION

CHANNEL	WT./FT. LBS.	AREA OF SECTION SQ. IN.	AXIS 1-1 I In.⁴	AXIS 1-1 S In.³	AXIS 1-1 r In.	AXIS 2-2 I In.⁴	AXIS 2-2 S In.³	AXIS 2-2 r In.
P 5000	3.05	.896	1.094	.625	1.105	.436	.537	.697
P 5001	6.10	1.792	6.215	1.912	1.862	.872	1.074	.697

I — Moment of Inertia S — Section Modulus r — Radius of Gyration

P 5000™ CHANNEL AND COMBINATIONS

1⅝" UNISTRUT CHANNEL WIDTH SERIES

41

NOTE: "Long span deep beams should be supported in a manner to prevent rotation at supports and tied between supports to prevent twist."

BEAM AND COLUMN DATA

BEAM SPAN OR UNBRACED HEIGHT	CHANNEL	UNIFORM LOAD @ 20000 PSI	DEFLECTION @ 20000 PSI	UNIFORM LOAD @ DEFLECTION = 1/240 SPAN	MAX. LOAD OF COLUMN LOADED @ C.G.	MAX. LOAD OF COLUMN LOADED @ SLOT FACE
24"	P5000	4160	.02	—	8400	4900
	P5001	4880*	.01	—	18200	9000
36"	P5000	2780	.05	—	7500	4800
	P5001	4880*	.02	—	17900	8900
48"	P5000	2080	.09	—	6300	4100
	P5001	4880*	.04	—	17500	8700
60"	P5000	1670	.15	—	5000	2800
	P5001	4880*	.08	—	17000	8500
72"	P5000	1390	.21	—	3800	2100
	P5001	4250	.11	—	16300	8300
84"	P5000	1190	.28	—	3100	1700
	P5001	3640	.15	—	15600	7800
96"	P5000	1040	.37	—	2600	1500
	P5001	3180	.20	—	14700	7200
108"	P5000	920	.47	880	2200	1300
	P5001	2830	.25	—	13700	6600
120"	P5000	830	.58	720	2000	1100
	P5001	2550	.31	—	12500	5800

*LOAD LIMITED BY SPOT WELD SHEAR

BEAM SPAN	CHANNEL	UNIFORM LOAD @ 20000 PSI	DEFLECTION @ 20000 PSI	UNIFORM LOAD @ DEFLECTION = 1/240 SPAN
12'-0"	P5000	690	.84	500
	P5001	2120	.45	—
14'-0"	P5000	590	1.14	370
	P5001	1820	.61	2080
16'-0"	P5000	520	1.49	280
	P5001	1600	.80	1600
18'-0"	P5000	460	1.88	220
	P5001	1410	1.01	1260
20'-0"	P5000	410	2.30	180
	P5001	1270	1.25	1020

STRENGTH OF P 3010 NUTS USED IN P 5000 CHANNEL

Resistance to Slip — 1500 Lbs. per bolt
Pull Out Strength — 2000 Lbs. per bolt
Minimum Safety Factor of 3

FLAT PLATE FITTINGS

1⅝" UNISTRUT CHANNEL WIDTH SERIES

42

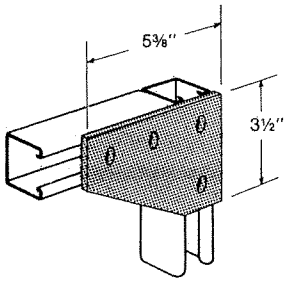

WT. LBS./C 105

P 1380

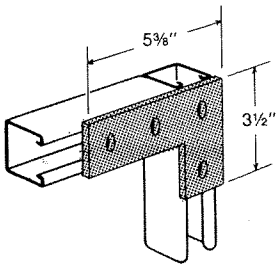

WT. LBS./C 80

P 1380 A

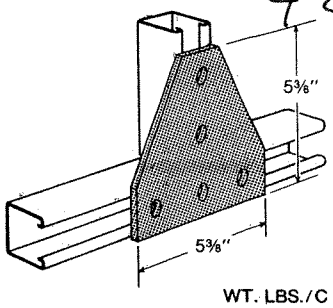

WT. LBS./C 148

P 1726

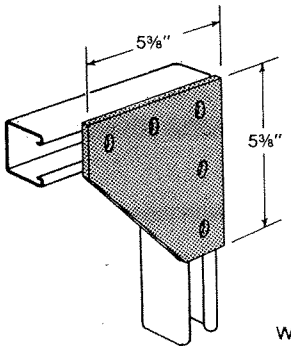

WT. LBS./C 150

P 1873

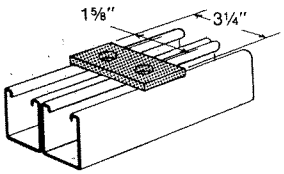

WT. LBS./C 35

P 1924

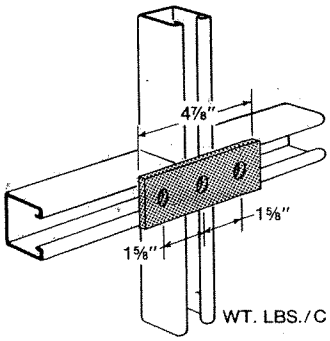

WT. LBS./C 50

P 1925

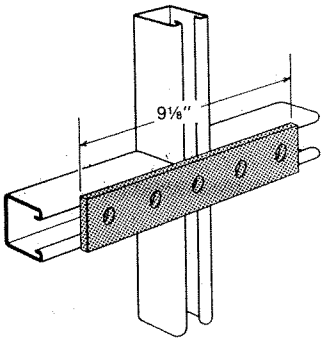

WT. LBS./C 94

P 1941

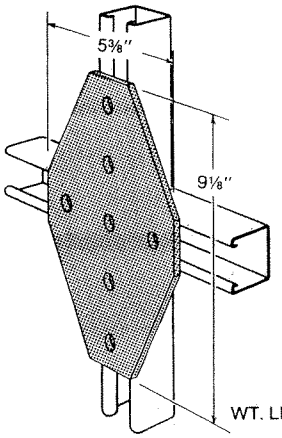

WT. LBS./C 240

P 1950

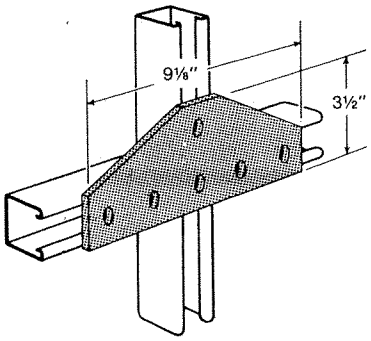

WT. LBS./C 176

P 1953

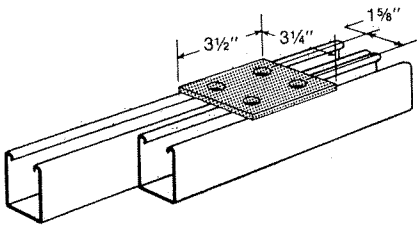

WT. LBS./C 73

P 2079

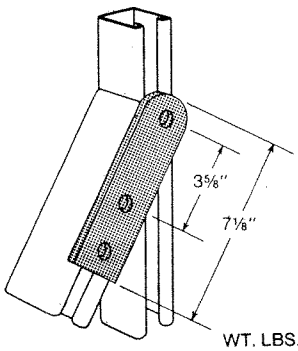

WT. LBS./C 75

P 2324

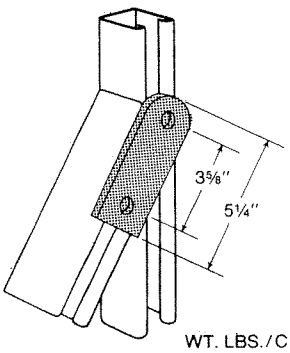

WT. LBS./C 55

P 2325

HOLE SIZE	9/16" DIAMETER	WIDTH	1-5/8"
HOLE SPACING	13/16" FROM END 1-7/8" ON CENTER	THICKNESS	1/4"

NINETY DEGREE ANGLE FITTINGS

1⅝" UNISTRUT CHANNEL WIDTH SERIES

43

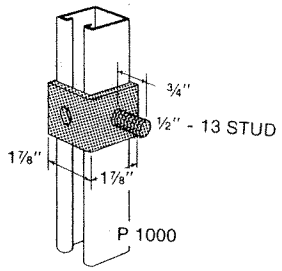

WT. LBS./C 45

P 1315

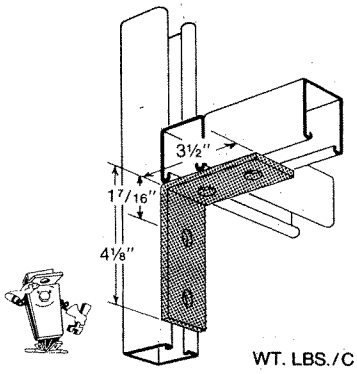

WT. LBS./C 78

P 1325

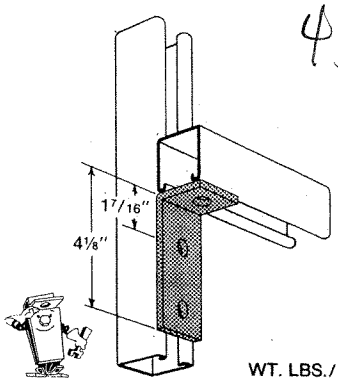

WT. LBS./C 58

P 1326

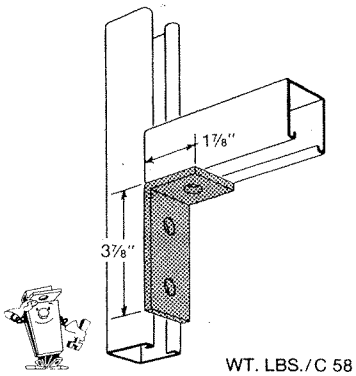

WT. LBS./C 58

P 1346

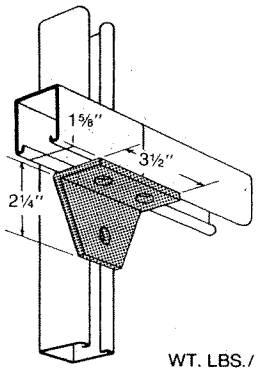

WT. LBS./C 70

P 1357

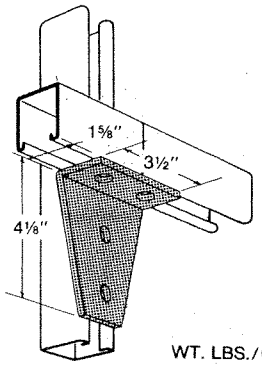

WT. LBS./C 105

P 1359

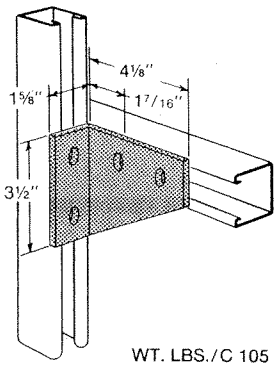

WT. LBS./C 105

P 1381

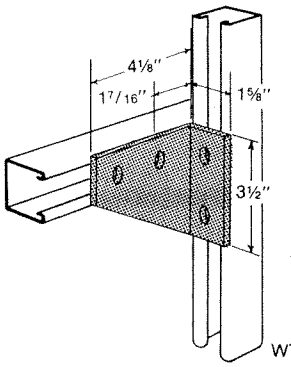

WT. LBS./C 105

P 1382

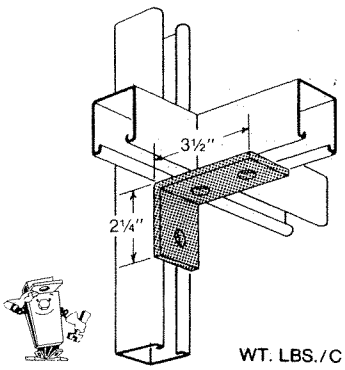

WT. LBS./C 58

P 1458

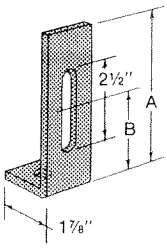

	A	B	WT. LBS./C
P 1498	4⅞"	2½"	65
P 1499	6⅞"	4½"	85

P 1498 & P 1499

	A	WT. LBS./C
P 1538A	3⅞"	61
P 1538B	5⅞"	84
P 1538C	7⅞"	107
P 1538D	9⅞"	130

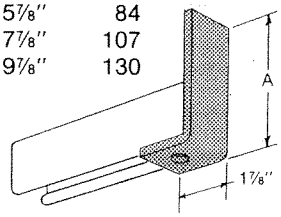

P 1538 A — P 1538 D

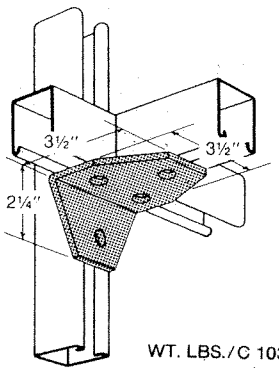

WT. LBS./C 103

P 1579

HOLE SIZE	9/16" DIAMETER	WIDTH	1-5/8"
HOLE SPACING	13/16" FROM END 1-7/8" ON CENTER	THICKNESS	1/4"

WING SHAPE FITTINGS

1⅝" UNISTRUT CHANNEL WIDTH SERIES

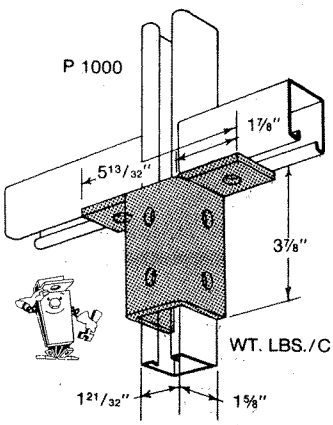

WT. LBS./C 150

P 2346

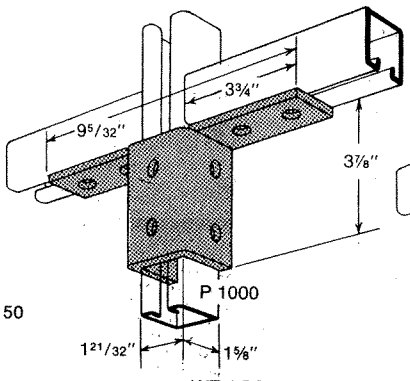

WT. LBS./C 193

P 2347

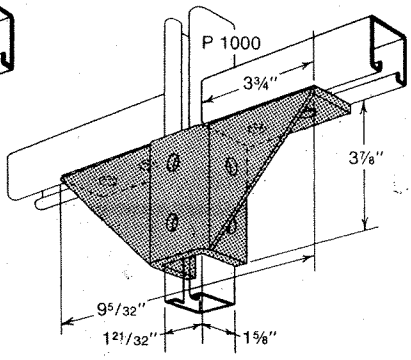

WT. LBS./C 274

P 2348

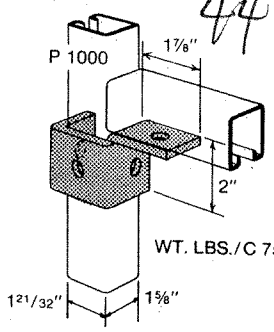

WT. LBS./C 75

R — AS SHOWN
L — OPPOSITE HAND

P 2472 R-L

POST BASES

1⅝" UNISTRUT CHANNEL WIDTH SERIES

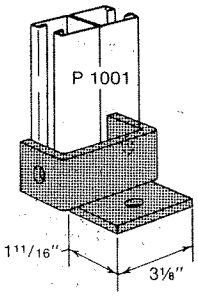

WT. LBS./C 116

P 2453

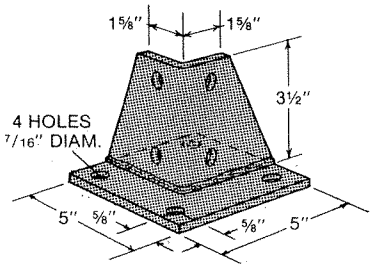

WT. LBS./C 297

P 1887

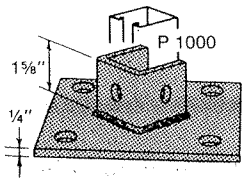

WT. LBS./C 307

P 2072

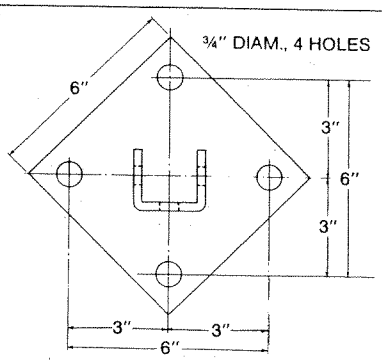

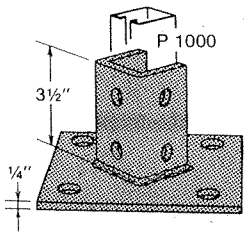

WT. LBS./C 373

P 2072 A

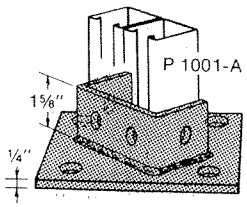

WT. LBS./C 325

P 2073

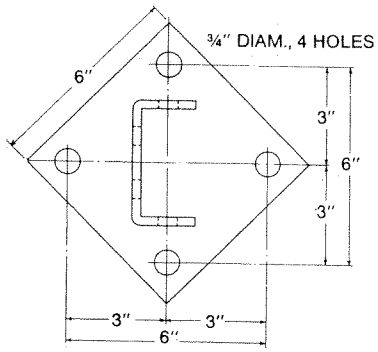

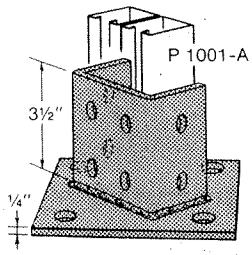

WT. LBS./C 408

P 2073 A

HOLE SIZE	9/16" DIAMETER	WIDTH	1-5/8"
HOLE SPACING	13/16" FROM END 1-7/8" ON CENTER	THICKNESS	1/4"