HNR

STRUCTURAL CALCULATION COVER SHEET

Date: 10/16/01

1 of 25

Calculation No:3442.053.SCAL.003,
Calculation Title: LDCC TRAPEZE DESIGN FOR 12" DIA PIPE PARALLEL TO FRAMING
Project ID # 100256
Project Title: CCN CHILLED WATER SYSTEM OPTIMIZATION MASTER PLAN

ORIGINAL AND REVISED CALCULATION/ANALYSIS APPROVAL

	Rev. A Name/Signature/Date	Rev. 0 Name/Signature/Date	Rev._ Name/Signature/Date
Originator: DAVID APPLE	10/16/01	8/29/02	
Checked By: JIM WEEKS	10/16/01	8/29/02	
Approved By: JIM WEEKS	10/16/01	8/29/02	
Other:			

AFFECTED DOCUMENTS

Document Number	Document Title	Rev. Number
Drawing No. C52952	CCN Chilled Water System Optimization Master Plan	T1, M1-M33 Rev. B E1-E14 Rev. A
Drawing No. C52952	CCF/LDCC Cooling Plant Modifications	Rev. 0
Drawing No. C53116	LDCC EC-1 Modifications	Rev. 0

Record of Revision

Rev.	Reason for Revision
REV A	FIRST SUBMITTAL OF CALCULATIONS
Rev. 0	All pages of this calculation 3442.053.SCAL.003 Rev. A are considered Rev. 0, approved and released based upon no technical changes to the calculation during/after formal review.

HNR Holmes & Narver | Raytheon **STRUCTURAL DESIGN CALCULATION SHEET**	Project Title: CCN CHILLED WATER SYSTEM OPTIMIZATION MASTER PLAN Project ID #100256 Task Order # 053

Calculation No. 3442.053.SCAL.003	PERFORMED BY : _____ 10/16/01 DAVID APPLE
Rev. No. A	CHECKED BY: _____ 10/16/01 JIM WEEKS
Calculation Title: LDCC TRAPEZE DESIGN FOR 12" DIA PIPE PARALLEL TO FRAMING	

INTRODUCTION Purpose	Provide a pipe hanger design for 1 - 12" diameter steel pipe. Provide calculations and details for the pipe hanger design.
Scope	Design a trapeze hanger system with for 1 - 12" diameter steel pipe, with lateral seismic restraint.
DESIGN BASIS Design Inputs	The LDCC facility is considered a Performance Category (PC) 1 facility. Piping and component weights provided by Mechanical Engineer and from manufacturers printed information.
Criteria	LANL Facility Engineering Manual, Chapter 5 (Ref. 1) LANL Specification Section 13085, Seismic Protection (Ref. 2)
Assumptions	The capacity of the third floor framing system is adequate to carry the additional loads imposed by this piping project and future project needs - (Ref. 3442.053.SCAL.001).
REFERENCES	(1) LANL Facility Engineering Manual, Chapter 5 (2) LANL Specification Section 13085, Seismic Protection (3) ASCE 7-98 (4) AISC Manual of Steel Construction, 9th Edition (5) IBC 2000 (6) DOE-STD-1020-94 (7) 3442.053.SCAL.001
METHODS	Hand calculations were used to prepare these calculations.
RESULTS AND CONCLUSIONS	Design calculations and details have been provided to support piping for this project.

Holmes & Narver | Raytheon

CALCULATION CHECKLIST

Task/Project #: 100256
Task Order 053
CCN CHILLED WATER SYSTEM OPTIMIZATION MASTER PLAN

Calculation Number: 3442.053.SCAL.003 3 of 25 | Revision A

Reviewer/Checker : JIM WEEKS

Reviewer performed or ~~supervised~~ subject calculation.
_____NO _Y_YES Justification Attachment _____, _____ pages

Alternate Verification method approved _____ Method _____

Date 10/15/01

ITEM(S) CHECKED	Accept Y/N	OBJECTIVE EVIDENCE Sheets		INITIAL/ DATE
1. Cover forms properly completed.	Y			10/15
2. Calculation Sheet headers complete with calc. no., rev., etc.	Y			10/15
3. Calculation Sheet contents complete per format.	Y			10/15
4. Listed attachments included.	Y			10/15
5. Calculation Objective clearly described.	Y			10/15
6. Criteria are suitable and properly referenced to task-specific documents.	Y			10/15
7. Assumptions and data described and attached or referenced to task documents.	Y			10/15
8. Calculation method identified and appropriate for the design activity.	Y			10/15
9. Calculation results reasonable and correctly described in Results and Conclusions.	Y			10/15
10. Computer Program identified with version and revision.	N/A			
11. Computer Program references method used, etc.	N/A			
12. Computer input/output provided.	N/A			
13. Computer run traceable to calculation.	N/A			
14. Computer input data within permissible design input range.	N/A			
15. Computer Program validation/verification addressed.	N/A			

REMARKS

Checker Print Name & Sign
JIM WEEKS

Date 10/15/01

Preparer Print Name & Sign
DAVID APPLE

Date 10-16-01

CHECKED [illegible] DATE 10/3

APPROVED [illegible] DATE 10/3

Holmes & Narver
ARCHITECTS - ENGINEERS
6501 Americas Parkway NE Suite 700
Albuquerque, NM 87110

JOB NO. 03-4102 442.0053
3442.053.SCAL.003 REV. A
SHEET 4 OF 25

TITLE LDCC Trapeze Design for 1-12" Dia. Pipe Parallel to Framing
CCN CHILLED WATER SYSTEM OPTIMIZATION MASTER PLAN

BY [illegible] DATE 9.30-01

#100256

Consider additional case for pipe & fitting layout: when pipe is parallel to W24x55 3rd floor framing members - use a trapeeye spanning 7'-6" to attach to two W24x55's.

Load w/: (NO 6" ϕ at this hanger)

2 - 12" 90 w adapters	= 2(74+48.4) =	245 lbs
15 ft. 12" ϕ pipe	= 15 x W_{12} = 15 (115 plf) =	1725 lbs
(v) 4 couplings STYLE 07	= 4(28.2)	= 115 lbs
		2085 lbs.

Total vertical load max per hanger = 2100 lbs plus hanger self-weight.

Say Wp = 2300 lbs for design, seismic design.

FORM 8X8

CHECKED [illegible] DATE 10-13

APPROVED [illegible] DATE 10-13

Holmes & Narver
ARCHITECTS - ENGINEERS
6501 Americas Parkway NE Suite 700
Albuquerque, NM 87110

JOB NO. 03410 3442.0053
3442.053.SCAL-003 REV. A
SHEET 5 OF 25

TITLE LDCC Trapeze Design for 12" Dia. Pipe Parallel to Framing
CCN CHILLED WATER SYSTEM OPTIMIZATION MASTER PLAN
#100256

BY DAA DATE 9-30-01

For this condition unistrut will not carry the load of 2300# at ℄ of 7'-6" span (90").
Look at TS sections:

$M_{pipe} = \frac{Pl}{4} = W_p \frac{(90 \text{ in-in})}{4} = (2.3 \text{ K})\frac{(90)}{4} = 51.8 \text{ K-in.}$

TS 4x4 x 1/4" $S = 4.11 \text{ in}^3$

$f_b' = M/S = 51.8/4.11 = 12.6 \text{ KSI}$ + M self-wt. —

$F_b = 0.66 F_y = 0.66(46 \text{ KSI}) = 30.3 \text{ KSI} \Rightarrow$ OK. —

For constructability, since TS 4x4 x 3/8" is used in this project for Floor support and hangers, use TS 4x4 x 3/8 for this hanger too. $S = 5.35 \text{ in}^3$

$W_{self} = 17.3$ plf.

$M_{self} = wl^2/8 = 17.3(90)^2/8 = 17.5 \text{ K-in.}$

$M_{TOTAL} = (17.5 + 51.8) \text{ K-in} = 69.3 \text{ K-in}$

$f_b = M/S = 69.3/5.35 \text{ in}^3 = 13.0 \text{ KSI} \leq F_b = 30.3 \text{ KSI}$.
OK. ✓ —

Per LANL spec Section 15060, 3.4 B
USE 7/8" ϕ rod for 12" ϕ HVAC water pipe.

7/8" ϕ rod $T_{all} = 3770$ lbs each.
$T_{actual} = 2300 \text{ lbs}/2 = 1150$ lbs. OK. ✓

FORM 8X8

CHECKED ____ DATE 10/13

APPROVED ____ DATE 10/13

Holmes & Narver
ARCHITECTS - ENGINEERS
6501 Americas Parkway NE Suite 700
Albuquerque, NM 87110

JOB NO. 03410344 2.0053
3442.053. SCAL.003 REV. A

SHEET 6 OF 25

TITLE LDCC Trapeze Design for 1-12" Dia. Pipe Parallel to Framing BY QAA DATE 9-30-01
#100256 CCN CHILLED WATER SYSTEM OPTIMIZATION MASTER PLAN

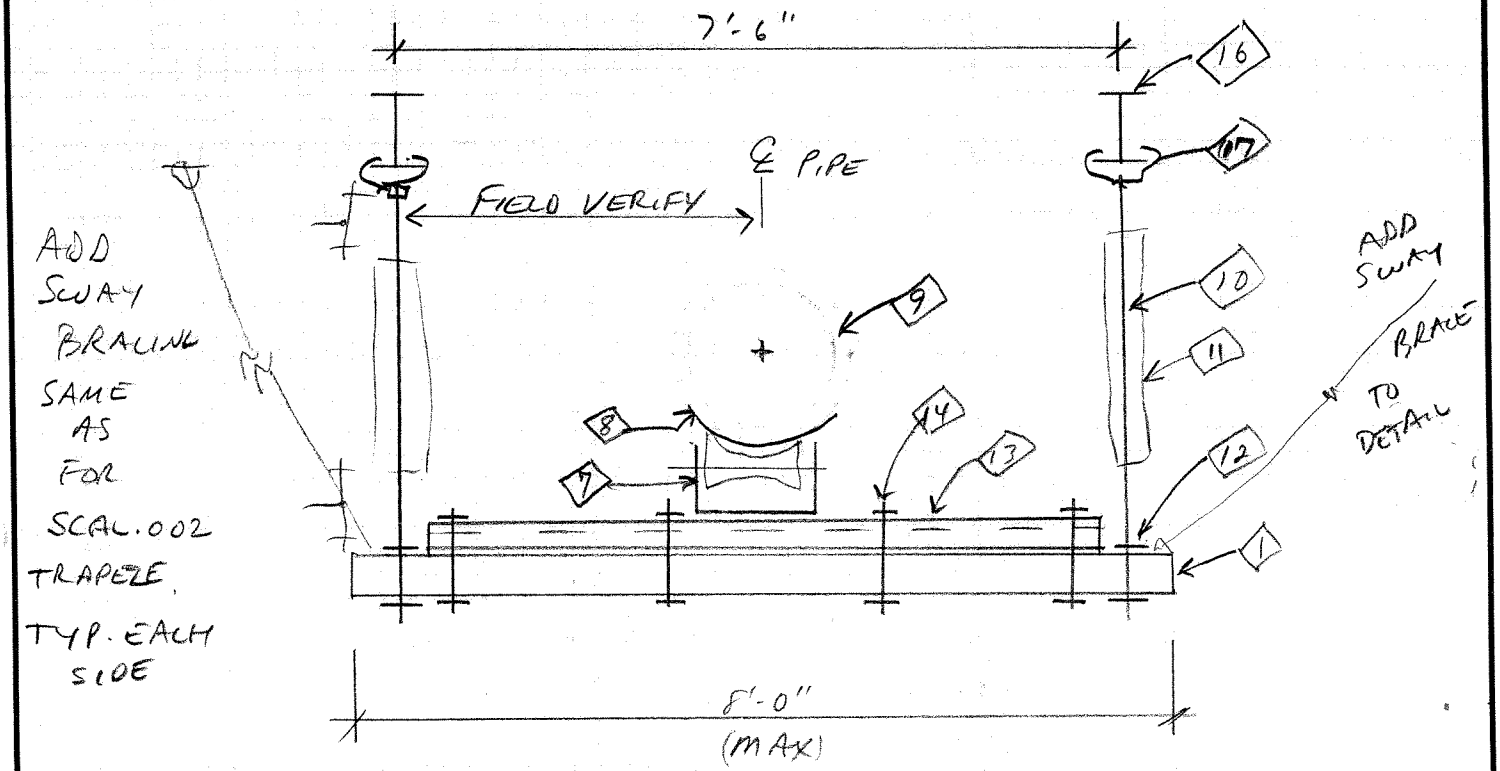

16. 3rd Level Framing member. (TYP.)
1. TS 4x4x3/8". Bevel cut edges smooth
12. Washer, nut. Typ. each end of horiz. member
13. P1000 Unistrut
14. 1/2" Ø bolt, typ. of 4
7. PIPE ROLL STAND.
8. Insulation protection shield
9. 12" Ø sch 40 steel pipe w/ 1 1/2" insulation
10. 7/8" Ø threaded rod.
11. Rod stiffener, typ. each side.
15. 6" max, typ. each side
17. Beam clamp Grinnell fig 292 or appr. equal.

FORM 8X8

Holmes & Narver
Architects – Engineers
6501 Americas Parkway NE Suite 700
Albuquerque, NM 87110

CHECKED DATE 10/15/01 JOB NO. 3442.053.SCAL.003
Rev. A

APPROVED DATE 10/15/01 SHEET 1 OF 19

BY DAA DATE 10-15-01

TITLE LDCC Trapeze Design for 1-12" Dia. Pipe Parallel to Framing
#100256 CHILLED WATER SYSTEM OPTIMIZATION MASTER PLAN

APPENDIX

Drawing No. C52952, Sheet M8	1 page
Drawing No. C52952, Sheet M9	1 page
Drawing No. C52952, Sheet M15	1 page
AISC ASD 9th Edition, p. 1-96, Structural Tubing, Square	1 page
Unistrut Catalog No. 10R	3 pages
Grinnell Pipe Hangers	7 pages
Tolco Incorporated Catalog Cut Sheets	4 pages

8

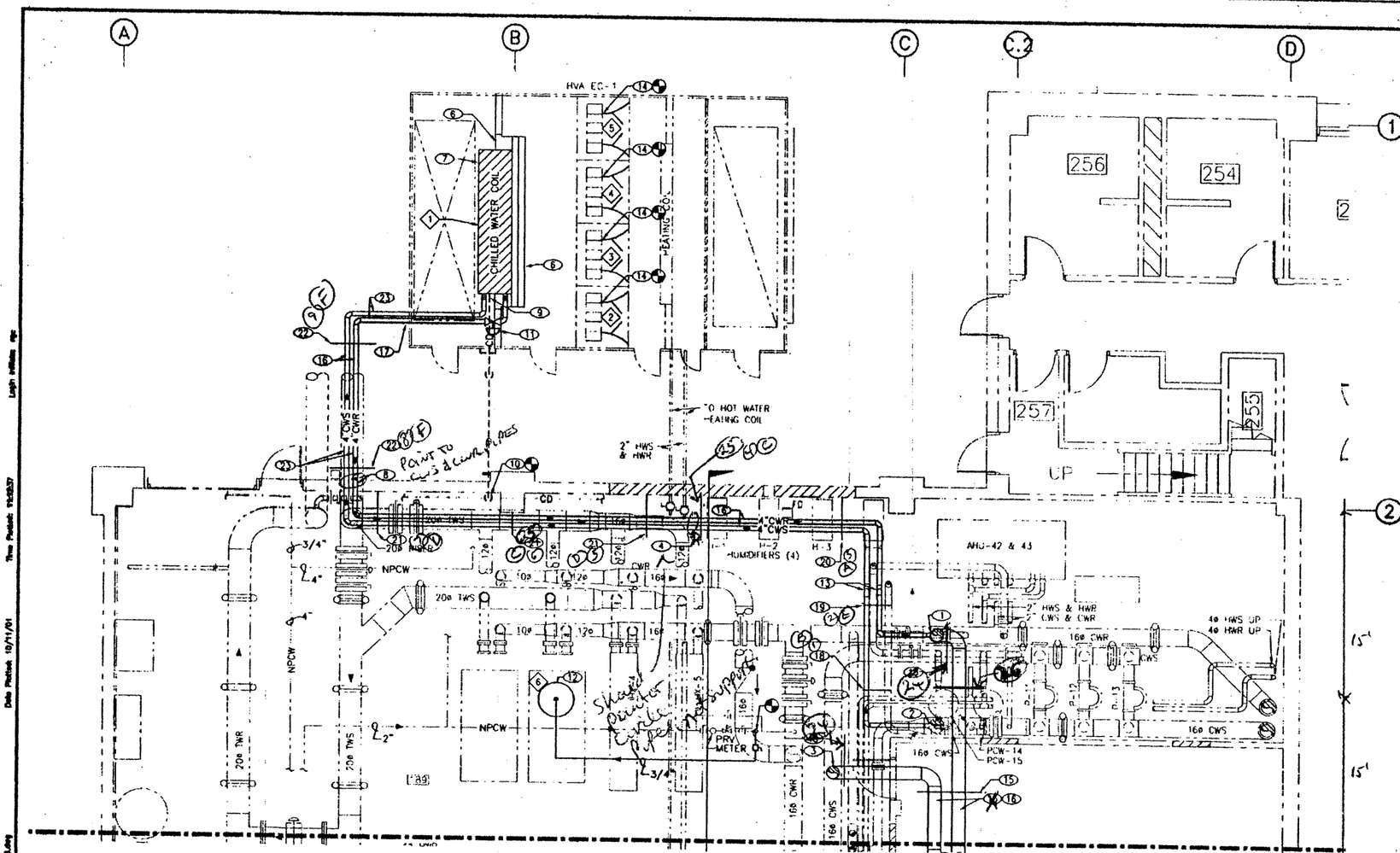

CHILLED WATER PIPING AND HVAC PLAN – AREA A
SCALE: 1/4"=1'-0"

KEYED NOTES

1. SEE DETAIL 3/M17 FOR CWR CONNECTION DETAIL.
2. SEE DETAIL 4/M17 FOR CWS CONNECTION DETAIL.
3. HOT TAP THE CWS WITH A 12"ø. INSTALL A 12"ø VALVE AND EXTEND CWS PIPING AS SHOWN. SEE DETAIL 5/M17
4. ROUTE CWS AND CWR PIPING UP ON TOP OF MEZZANINE FRAMING STRUCTURE. SEE DETAIL 2/M16.
5. NOT USED
6. INSTALL 14GA. SHEET METAL BLANK DOWN STREAM OF INACTIVE PORTION OF COIL FACE DAMPERS.
7. INSTALL CHILLED WATER COILAND COIL CASING. SEE DETAIL 1/M17 AND 2/M17 FOR PROCEDURE.
8. CORE DRILL AND SLEEVE 4"ø CHILLED WATER SUPPLY AND RETURN PIPING THROUGH WALL. SEAL OPENING WITH LINK SEAL OR EQUIVALENT. INSTALL ESCUTIONS ON BOTH SIDES OF WALL FOR EACH PIPE.
9. ROUTE 1-1/2" CONDENSATE DRAIN FROM COIL DRAIN PAN SUMP PUMP UP TO BOTTOM OF PIPE 10'-0".
10. ROUTE CONDENSATE DRAIN UP 85" ABOVE GRADE. SLOPE DRAIN PIPE TOWARD BUILDING. SLEEVE PIPE THROUGH WALL. SEAL WALL PENETRATION WITH LINK SEAL. DROP CONDENSATE DRAIN PIPING DOWN AND CONNECT TO EXISTING 1-1/2"ø DRAIN PIPE.
11. INSTALL MODULATING TWO WAY CONTROL VALVE. SEE CONTROL DRAWINGS.
12. INSTALL CHILLED WATER EXPANSION TANK ON EXISTING CONCRETE PAD AND ANCHOR IN PLACE. SET PRESSURE AT 25 PSIG.
13. DROP PIPE DOWN TO WITHIN 12" OF TOP OF MEZZANINE LATTICE.
14. INSTALL NEW INLET CONE WITH INLET VANE DAMPERS. INSTALL IN ACCORDANCE WITH THE MANUFACTURERS INSTRUCTIONS. FURNISH AND INSTALL PNEUMATIC ADAPTER WITH EACH DAMPER.
15. SEE STRUCTURAL DETAIL 4/M15 FOR PIPE SUPPORT AND SEISMIC RESTRAINT REQUIREMENTS.

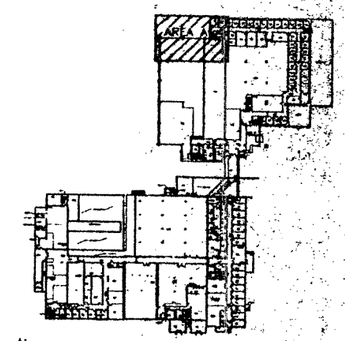

KEYPLAN
SCALE:NONE

NOT FOR CONSTRUCTION

KEYED NOTES (CONT.)

16. INSULATE PIPING. SEE SPECIFICATIONS.
17. SUPPORT PIPING AT WALL OF UNIT EC-1 USING P-1000 UNISTRUT AND CLAMPS. SEAL PIPE PENETRATIONS WITH EXTERIOR TYPE CAULKING.
18. SUPPORT PIPING ~~AT WALL~~. SEE STRUCTURAL DETAIL 1/M16 (B) FROM EXISTING STRUCTURE
19. SUPPORT PIPING ~~AT WALL~~. SEE STRUCTURAL DETAIL 4/M16 (E) FROM EXISTING STRUCTURE
20. SUPPORT PIPING ~~AT WALL~~. SEE STRUCTURAL DETAIL 2/M15 (A) BACK AS IT WAS
21. SUPPORT PIPING ~~AT WALL~~. SEE STRUCTURAL DETAIL 3/M16 (D)
22. SUPPORT PIPING ~~AT WALL~~. SEE STRUCTURAL DETAIL 5/M16 (F) FROM EXISTING PIPE BRIDGE STRUCTURE
23. INSTALL HEAT CABLE ON EXTERIOR CWR AND CWS CHILLED WATER PIPING. COORDINATE WITH DIVISION 16.
24. SEE STRUCTURAL DETAIL 5/M15 FOR PIPE SUPPORT AND SEISMIC RESTRAINT REQUIREMENTS
25. SUPPORT PIPING FROM EXISTING STRUCTURE. SEE STRUCTURAL DETAIL 2/M16 (C)
26. SEE NOTE 15 except provide 0.4 g's and Strand for 1.12" DIA PIPE.

0' 1' 2' 4' 6' 8'
1/4"=1'-0"

ENGINEER'S SEAL

REV	DATE	CLASS REV	DESCRIPTION	DRAWN	CHECKED	APPROVED
B	10/5/01		90% "IN-HOUSE REVIEW"	RC	NS	DD
A	9/18/01		60% "IN-HOUSE REVIEW"	RC	NS	DD

HOLMES & NARVER/RAYTHEON (HNR)

CCN CHILLED WATER SYSTEM OPTIMIZATION MASTER PLAN

MECH: CHILLED WATER PIPING AND HVAC PLAN – AREA A

BLDG. 1498 & 132 TA-3

SUBMITTED: DWIGHT DORSEY

APPROVED FOR RELEASE: DOUG HEYDLE

Los Alamos

SHEET M8

PROJECT ID 100256

DRAWING NO. C52952 REV B

Cad File Name: H:\2000\25\cad\base\

Date Plotted: 10/11/01

Time Plotted: 11:05:57

Login Initials: rjc

9

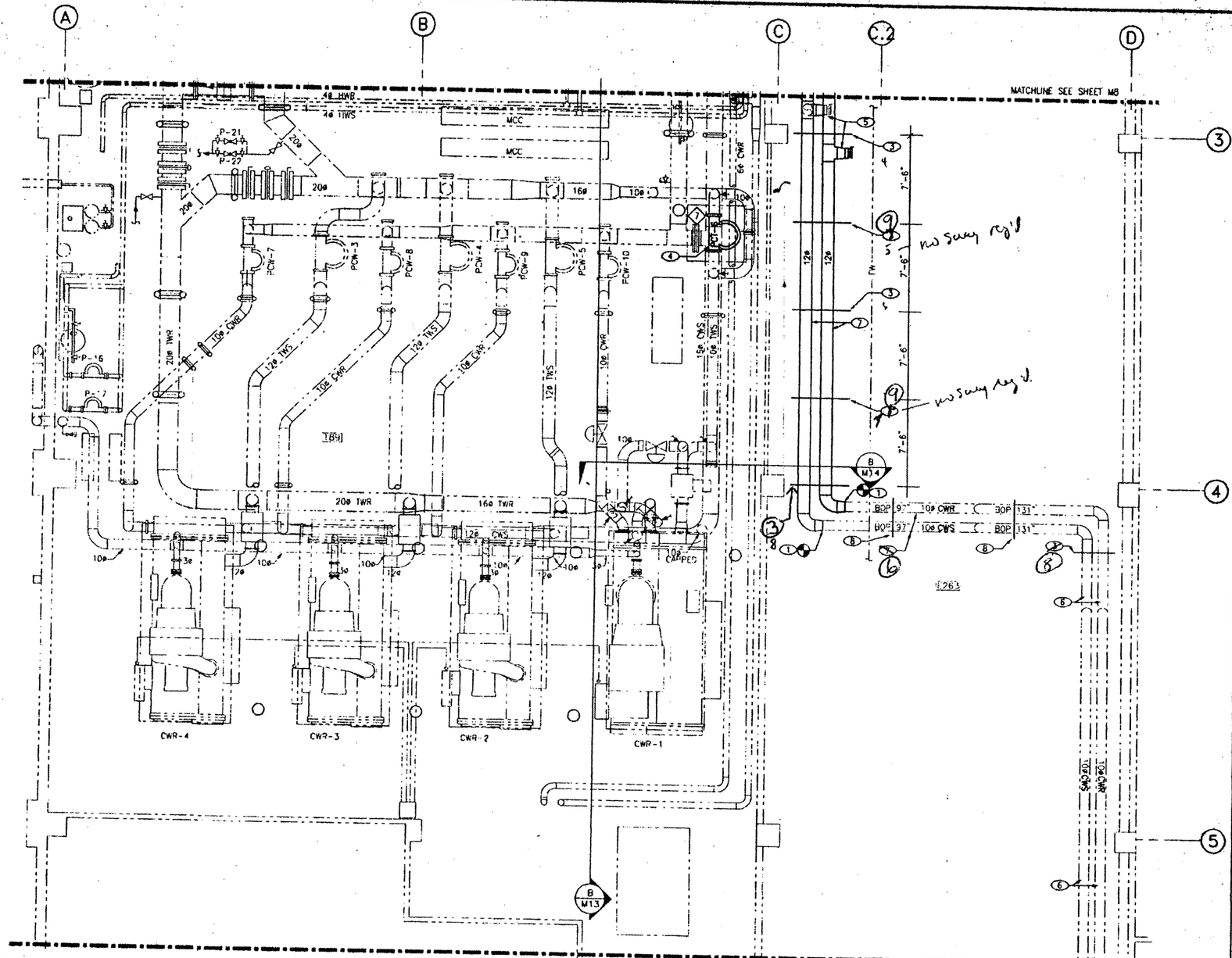

GENERAL NOTES

1. ALL PIPE FLANGES SHOULD BE INSTALLED 1X FROM THE CENTER LINE OF PIPE HANGER TO ALLOW ROOM FOR PIPE MOVEMENT.

KEYED NOTES

1. CONNECT CHILLED WATER SUPPLY PIPING TO THE CONVERT TOWER WATER RETURN PIPING.
2. CONNECT CHILLED WATER RETURN PIPING TO THE CONVERT TOWER WATER SUPPLY PIPING.
3. SUPPORT AND SEISMICALLY BRACE NEW CHILLED WATER PIPING. SEE STRUCTURAL DETAIL 4/M15
4. INSTALL TOWER WATER PUMP 7 PCT-6.
5. PROVIDE 12"ø TEE WITH 12ø"x10ø" REDUCER AND 6"ø VALVE FOR FUTURE. INSTALL 6"ø BLIND FLANGE. MAINTAIN A MINIMUM OF 12" CLEARANCE BETWEEN TEE FITTING TO CENTER LINE OF PIPE SUPPORT TO ALLOW FOR PIPE MOVEMENT.
6. INSULATE CONVERTED TOWER WATER PIPING TO CHILLED WATER PIPING. SEE SPECIFICATIONS. ADJUST AND/OR REPLACE PIPE HANGER SADDLES TO FIT AROUND PIPE AND INSULATION. TEMPORARILY SUPPORT PIPE FROM MEZZANINE FLOOR WHILE ADJUSTING HANGERS.
7. INSULATE PIPING. SEE SPECIFICATIONS.
8. SUPPORT AND SEISMICALLY BRACE NEW CHILLED WATER PIPING. SEE STRUCTURAL DETAIL 5/M15 EXISTING PIPE HANGER
9. SEE NOTE 3, except delete seismic bracing at this location

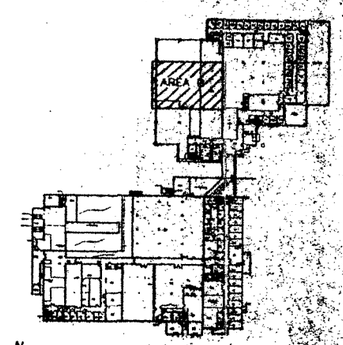

KEYPLAN
SCALE: NONE

NOT FOR CONSTRUCTION

REV	DATE		DESCRIPTION	DR	CK	DD	
B	10/5/01		90% "IN-HOUSE REVIEW"	BH	WS	DD	
A	9/18/01		60% "IN-HOUSE REVIEW"	DC	MS	DD	
NO.	DATE	CHKD BY	REMARKS	DR	CK	DSGN	RA

HOLMES & NARVER/RAYTHEON (HNR)

CCN CHILLED WATER SYSTEM OPTIMIZATION MASTER PLAN

MECH: CHILLED WATER PIPING PLAN – AREA B

BLDG. 1498 & 132

TA-3

DRAWN BY DWIGHT DORSEY

Los Alamos

SHEET M9

PROJECT ID 100256

DRAWING NO. C52952

ENGINEER'S SEAL

10

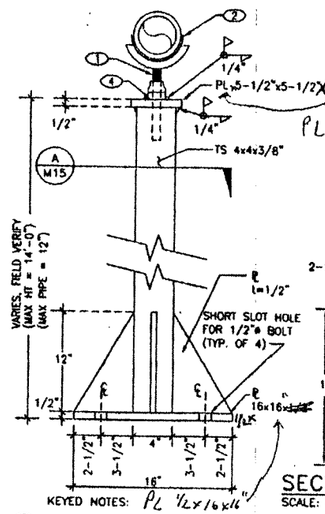

KEYED NOTES:

1. ADJUSTABLE PIPE SADDLE SUPPORT (FIG. 264, GRINNELL CATALOG PH-99). SIZE PER PIPE DIAMETER AND INSULATION THICKNESS, SPECIFIED ELSEWHERE.
2. INSULATION SHIELD. SIZE PER PIPE DIAMETER AMD INSULATION THICKNESS SPECIFIED ELSEWHERE.
3. MOUNT USING HILTI HSL M 12/50 HEAVY-DUTY EXPANSION ANCHOR (ITEM NO. 00066593, HILTI 2001 CATALOG). INSTALL PER MANUFACTURERS RECOMMENDATIONS.
4. DRILL HOLE IN CENTER OF PLATE TO ALLOW VERTICAL SUPPORT MOVEMENT.

PIPE SUPPORT – FLOOR MOUNTED

SCALE: NONE (1 / M10)

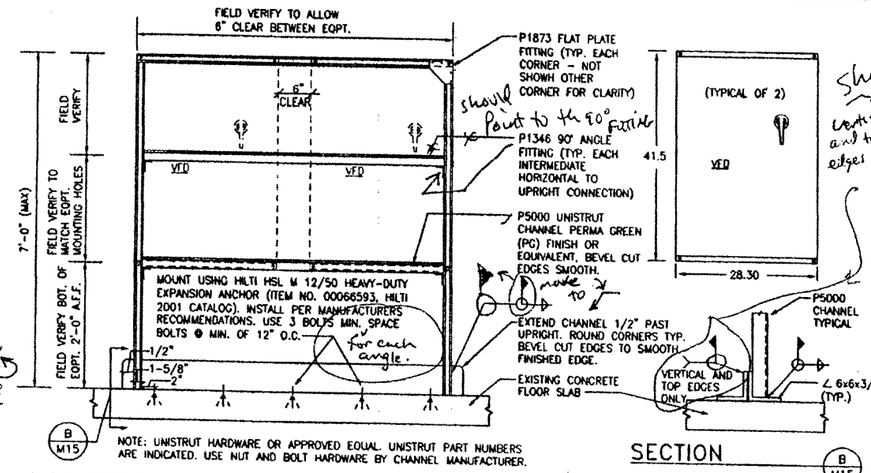

NOTE: UNISTRUT HARDWARE OR APPROVED EQUAL. UNISTRUT PART NUMBERS ARE INDICATED. USE NUT AND BOLT HARDWARE BY CHANNEL MANUFACTURER.

VFD SUPPORT STAND

SCALE: NONE (3 / M10, 3 / M14)

SECTION

SCALE: NONE (B / M15)

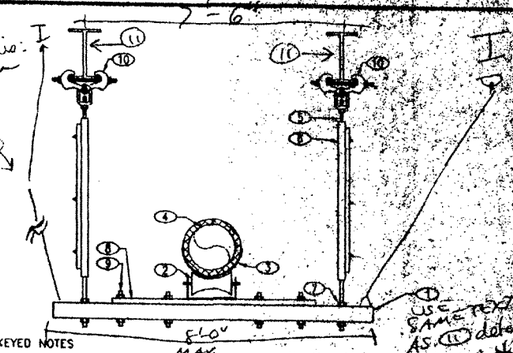

PIPE HANGER SUPPORT

SCALE: NONE (5 / M8)

(11) EXISTING 3rd Level FRAMING.

(1) TS 4x4x 3/8". Bevel cut edges Smooth.

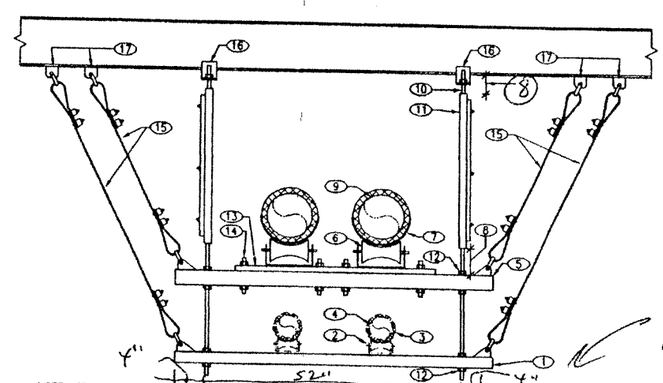

ADD DIMENSIONS

NOTE: ITEMS IN NOTES 2, 3, 4, IN FUTURE PROJECT TRAPEZE CAPACITY 2 @ 6"ø SCH. 40 PIPES MAX. SIZE ITEMS 2, 3, 4, TO MATCH FURTURE PIPE SIZE IN NOTES.

KEYED NOTES

1. P5000 UNISTRUT CHANNEL PERMA GREEN (PG) FINISH OR EQUIVALENT, BEVEL CUT EDGES SMOOTH.
2. 16" PIPE ROLL STAND. SEE GRINNELL FIG. 271, (OR APPROVED EQUAL) ATTACH PER MANUFACTURERS RECOMMENDATIONS. N.I.C. (FUTURE)
3. PROTECTION SADDLE N.I.C. (FUTURE)
4. 6"ø SCH 40 STEEL PIPE WITH 1-1/2" INSULATION. SEE SPECIFICATIONS. N.I.C. (FUTURE)
5. TS 4x4x3/8", BEVEL CUT EDGES SMOOTH.
6. 16" PIPE ROLL STAND. SEE GRINNELL FIG. 271 (OR APPROVED EQUAL). ATTACH PER MANUFACTURERS RECOMMENDATIONS.
7. 16" INSULATION PROTECTION SADDLE.
8. 6" MAXIMUM, TYPICAL
9. 12"ø SCH 40 STEEL PIPE WITH 1-1/2" INSULATION. SEE SPECIFICATIONS.
10. 7/8"ø ASTM A36 ALL THREADED ROD.
11. ROD STIFFNER FOR 7/8"ø ROD. SECURE WITH 2 BOLTS MIN., 12" O.C. MAX. (TOLCO FIG. 98 OR APPROVED EQUAL).
12. WASHER, NUT, TYPICAL EACH END EACH SIDE OF HORIZONTAL MEMBER.
13. P1000 (UNISTRUT OR APPROVED EQUAL)
14. 1/2"ø BOLT, NUT, LOCK WASHER, TYP. OF 4
15. CABLE SWAY BRACE ASSEMBLY. USE 1/4" DIA. GALVANIZED 7x19 CORE STRAND AIRCRAFT CABLE. USE CLAMPS TO FULLY DEVELOP CABLE STRENGTH. ATTACH TO TRAPEZE WITH TOLCO FIG. 982. CABLE SWAY BRACE ATTACHMENT, OR APPROVED EQUAL. THRU BOLT TO TRAPEEZE AND MECHANICALLY ATTACH TO 7/8"ø ROD USING A 1/4" THICK PLATE.
16. BEAM CLAMP, GRINNELL FIG. 292 OR APPROVED EQUAL. VERIFY SIZE OF SUPPORT BEAM FLANGE.
17. USE WELDING LUG, TOLCO FIG. 343 OR APPROVED EQUAL. CONNECT SWAY BRACE ATTACHMENT WITH 3/4" DIA. BOLT, WASHER, DOUBLE NUT.

PIPE HANGER – DOUBLE TRAPEZE

SCALE: NONE (4 / M8, 4 / M9)

ADD SWAY BRACING to DETAIL 5 USE (4/MF) components & call outs w/ correct keynote #'s.

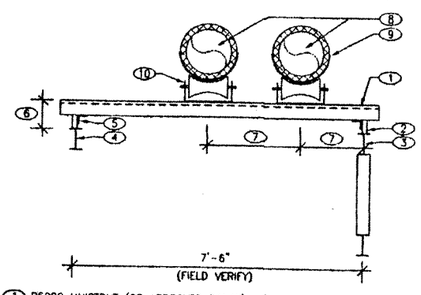

1. P5000 UNISTRUT (OR APPROVED EQUAL).
2. POST BASE P2072A UNISTRUT (OR APPROVED EQUAL), TYPICAL. ANCHOR TO SUPPORT MEMBER PER MANUFACTURERS RECOMMENDATIONS.
3. BT-4 TRUSS EXISTING. DRYWALL COVERING MEMBER, NOT SHOWN.
4. W 8x28 MEZZANINE FRAMING MEMBER. DRYWALL COVERING MEMBER, NOT SHOWN.
5. P1000 UNISTRUT POST AND P1325 90° FITTING, TYPICAL
6. ADJUST LENGTH OF P1000 UNISTRUT POST TO PROVIDE 12 INCHES FOR THIS DIMENSION.
7. FIELD VERIFY.
8. 4" DIA. SCH. 40 STEEL PIPE AND INSULATION.
9. INSULATION PROTECTION SADDLE TYPICAL.
10. PIPE ROLL STAND, GRINNELL FIG. 271 OR APPROVAL EQUAL.

SIZE AND MOUNT PER MANUFACTURERS RECOMMENDATIONS.

PIPE SUPPORT

SCALE: NONE (2 / M8) (A)

FOR 2-4" DIA. PIPES

NOT FOR CONSTRUCTION

REV	DATE	CLASS REV	REVISIONS	DRN	RS	CHKD	SUP	APP
B	10/5/01		90% "IN-HOUSE REVIEW"	RC	MS	DD		
A	9/18/01		60% "IN-HOUSE REVIEW"	RC	MS	DD		

HOLMES & NARVER/RAYTHEON (HNR)

HOLMES & NARVER/RAYTHEON ENGINEERS & CONSTRUCTORS
CRAVEN-GREEVES CONSULTING ENGINEERS
BODICKER & PAXTON CONSULTING ENGINEERS

CCN CHILLED WATER SYSTEM OPTIMIZATION MASTER PLAN

MECH: DETAILS

BLDG. 1498 & 132 TA-3

DRAWN P. CONDY
DESIGN M. SLAMA
CHECKED D. DORSEY
DATE 10/5/01

SUBMITTED DWIGHT DORSEY
APPROVED BY NNSA DOUG HEFELE

Los Alamos — Los Alamos National Laboratory, Los Alamos, New Mexico 87545

SHEET M15 OF

CLASSIFICATION REVISED DATE

PROJECT ID 100256 DRAWING NO. C52952 REV. B

ENGINEER'S SEAL

Date Plotted: 10/11/01 Time Plotted: 09:18:52 Login Initials: rgc
Cad File Name: 100256_B15.dwg Cad File Path: H:\100256_B15\cad\hnr\

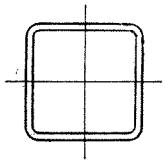

STRUCTURAL TUBING
Square
Dimensions and properties

Dimensions				Properties**					
Nominal* Size	Wall Thickness		Weight per Ft	Area	I	S	r	J	Z
In.	In.		Lb.	In.^{2}	In.^{4}	In.^{3}	In.	In.^{4}	In.^{3}
4.5×4.5	0.2500	¼	13.91	4.09	12.1	5.36	1.72	19.7	6.43
	0.1875	3/16	10.70	3.14	9.60	4.27	1.75	15.4	5.03
4×4	0.5000	½	21.63	6.36	12.3	6.13	1.39	21.8	8.02
	0.3750	⅜	17.27	5.08	10.7	5.35	1.45	18.4	6.72
	0.3125	5/16	14.83	4.36	9.58	4.79	1.48	16.1	5.90
	0.2500	¼	12.21	3.59	8.22	4.11	1.51	13.5	4.97
	0.1875	3/16	9.42	2.77	6.59	3.30	1.54	10.6	3.91
3.5×3.5	0.3125	5/16	12.70	3.73	6.09	3.48	1.28	10.4	4.35
	0.2500	¼	10.51	3.09	5.29	3.02	1.31	8.82	3.70
	0.1875	3/16	8.15	2.39	4.29	2.45	1.34	6.99	2.93
3×3	0.3125	5/16	10.58	3.11	3.58	2.39	1.07	6.22	3.04
	0.2500	¼	8.81	2.59	3.16	2.10	1.10	5.35	2.61
	0.1875	3/16	6.87	2.02	2.60	1.73	1.13	4.28	2.10
2.5×2.5	0.3125	5/16	8.45	2.48	1.87	1.50	0.868	3.32	1.96
	0.2500	¼	7.11	2.09	1.69	1.35	0.899	2.92	1.71
	0.1875	3/16	5.59	1.64	1.42	1.14	0.930	2.38	1.40
2×2	0.3125	5/16	6.32	1.86	0.815	0.815	0.662	1.49	1.11
	0.2500	¼	5.41	1.59	0.766	0.766	0.694	1.36	1.00
	0.1875	3/16	4.32	1.27	0.668	0.668	0.726	1.15	0.840

*Outside dimensions across flat sides.
**Properties are based upon a nominal outside corner radius equal to two times the wall thickness.

STRUCTURAL TUBING
Rectangular
Dimensions and properties

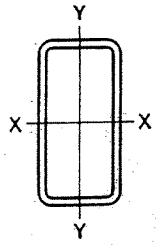

Dimensions				Properties**									
Nominal* Size	Wall Thickness		Weight per Ft	Area	X-X Axis				Y-Y Axis				J
					I_x	S_x	Z_x	r_x	I_y	S_y	Z_y	r_y	
In.	In.		Lb.	In.^{2}	In.^{4}	In.^{3}	In.^{3}	In.	In.^{4}	In.^{3}	In.^{3}	In.	In.^{4}
20×12	0.5000	½	103.30	30.4	1650	165	201	7.37	750	125	141	4.97	1650
	0.3750	⅜	78.52	23.1	1280	128	154	7.45	583	97.2	109	5.03	1270
	0.3125	5/16	65.87	19.4	1080	108	130	7.47	495	82.5	91.8	5.06	1070
20× 8	0.5000	½	89.68	26.4	1270	127	162	6.94	300	75.1	84.7	3.38	806
	0.3750	⅜	68.31	20.1	988	98.8	125	7.02	236	59.1	65.6	3.43	625
	0.3125	5/16	57.36	16.9	838	83.8	105	7.05	202	50.4	55.6	3.46	529
20× 4	0.5000	½	76.07	22.4	889	88.9	123	6.31	61.6	30.8	36.0	1.66	205
	0.3750	⅜	58.10	17.1	699	69.9	95.3	6.40	50.3	25.1	28.5	1.72	165
	0.3125	5/16	48.86	14.4	596	59.6	80.8	6.44	43.7	21.8	24.3	1.74	143
18× 6	0.5000	½	76.07	22.4	818	90.9	119	6.05	141	47.2	53.9	2.52	410
	0.3750	⅜	58.10	17.1	641	71.3	92.2	6.13	113	37.6	42.1	2.57	322
	0.3125	5/16	48.86	14.4	546	60.7	78.1	6.17	97.0	32.3	35.8	2.60	274
16×12	0.6250	⅝	110.36	32.4	1160	145	175	5.98	742	124	144	4.78	1460
	0.5000	½	89.68	26.4	962	120	144	6.04	618	103	118	4.84	1200
	0.3750	⅜	68.31	20.1	748	93.5	111	6.11	482	80.3	91.3	4.90	922
	0.3125	5/16	57.36	16.9	635	79.4	93.8	6.14	409	68.2	77.2	4.93	777
16× 8	0.5000	½	76.07	22.4	722	90.2	113	5.68	244	61.0	69.7	3.30	599
	0.3750	⅜	58.10	17.1	565	70.6	87.6	5.75	193	48.2	54.2	3.36	465
	0.3125	5/16	48.86	14.4	481	60.1	74.2	5.79	165	41.2	45.9	3.39	394
16× 4	0.5000	½	62.46	18.4	481	60.2	82.2	5.12	49.3	24.6	29.0	1.64	157
	0.3750	⅜	47.90	14.1	382	47.8	64.2	5.21	40.4	20.2	23.0	1.69	127
	0.3125	5/16	40.35	11.9	327	40.9	54.5	5.25	35.1	17.6	19.7	1.72	110
14×10	0.6250	⅝	93.34	27.4	728	104	127	5.15	431	86.2	101	3.96	885
	0.5000	½	76.07	22.4	608	86.9	105	5.22	361	72.3	83.6	4.02	730
	0.3750	⅜	58.10	17.1	476	68.0	81.5	5.28	284	56.8	64.8	4.08	564
	0.3125	5/16	48.86	14.4	405	57.9	69.0	5.31	242	48.4	54.9	4.11	477

*Outside dimensions across flat sides.
**Properties are based upon a nominal outside corner radius equal to two times the wall thickness.

UNITED STATES

UNISTRUT®

GENERAL ENGINEERING CATALOG

UNISTRUT ALL PURPOSE METAL FRAMING

UNISTRUT
NEW MEXICO
P.O. Box 3128 — Zip Code 87190
4820 Pan American Hwy., N.E.
Albuquerque, N.M. 87109
Phone: (505) 881-0264

NO. 10 R

P 1000® CHANNEL AND COMBINATIONS

13

1⅝" UNISTRUT CHANNEL WIDTH SERIES

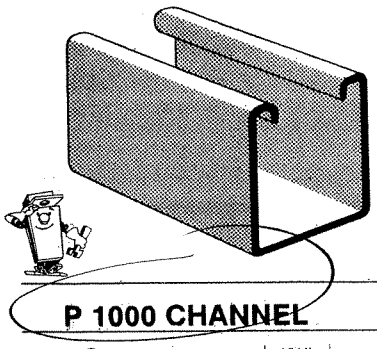

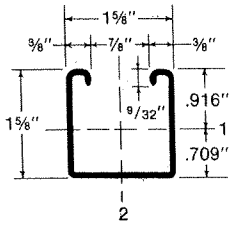

WT. LBS./C 190

P 1000 channel and combinations are roll formed from 12 gauge (.105") strip steel.

Standard lengths 10 and 20 feet.

P 1000 CHANNEL

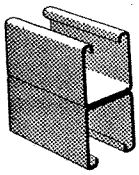

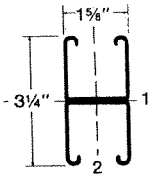

WT. LBS./C 380

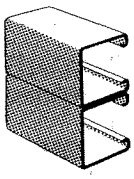

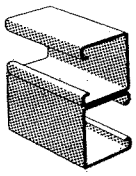

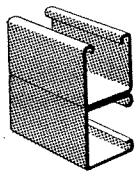

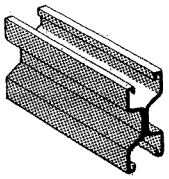

P 1001 **P 1001 A** **P 1001 B** **P 1001 C** **P 1001 K**

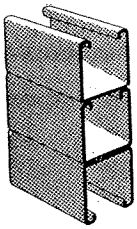

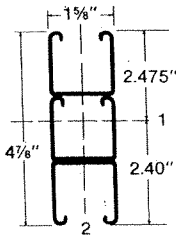

WT. LBS./C 570

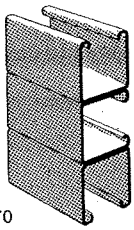

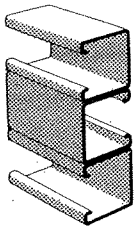

P 1001 3 **P 1001 A3** **P 1001 B3**

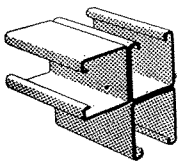

WT. LBS./C 570

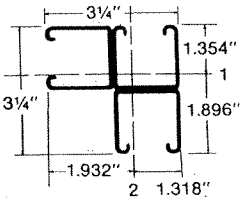

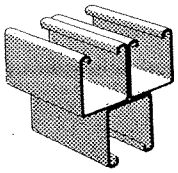

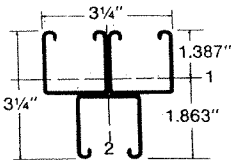

WT. LBS./C 570

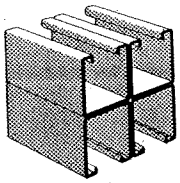

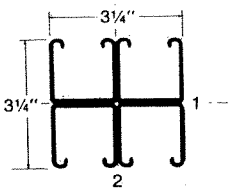

WT. LBS./C 760

P 1001 C3 **P 1001 D3** **P 1001 C41**

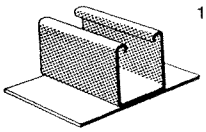

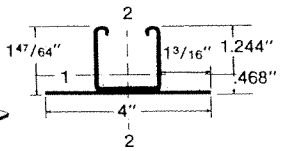

WT. LBS./C 335

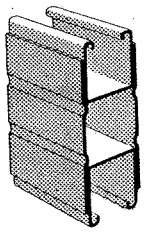

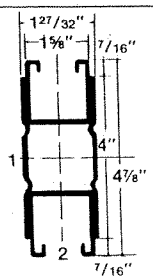

WT. LBS./C 670

P 1003 **P 1004 A**

BEAM LOADS

Allowable uniformly distributed loads are listed for various simple spans, that is, beam on two supports. If load is concentrated at center of span, multiply load from table by 0.5 and corresponding deflection by 0.8.

Stress 25,000 #/sq. in. — Recommended for use where deflection is not a factor on long spans.

Deflection 1/240 span — Recommended for use when deflection is a factor.

COLUMN LOADS

Column loadings are for allowable axial loads for the unsupported heights listed and include a K value of 0.80. For other K values see page 112. If loads are eccentric, loads should be reduced according to standard practice.

P 1000® CHANNEL AND COMBINATIONS

1⅝" UNISTRUT CHANNEL WIDTH SERIES

14

NOTE: "Long span deep beams should be supported in a manner to prevent rotation at supports and tied between supports to prevent twist."

BEAM AND COLUMN DATA

BEAM SPAN OR UNBRACED HEIGHT	CHANNEL	UNIFORM LOAD @ 25000 PSI	DEFLECTION @ 25000 PSI	UNIFORM LOAD @ 20000 PSI	DEFLECTION @ 20000 PSI	UNIFORM LOAD @ DEFLECTION = 1/240 SPAN	MAX. LOAD OF COLUMN LOADED @ C.G.	MAX. LOAD OF COLUMN LOADED @ SLOT FACE
24"	P1000	1690	.06	1350	.04	—	9800	4000
	P1001	2480*	.02	2480*	.02	—	22500	6200
	P1001C41	4970*	.02	4970*	.02	—	45700	12500
	P1004A	5860*	.01	5860*	.01	—	45800	12000
	P1001K	2550	.02	2550	.02	—	23000	7100
36"	P1000	1130	.12	900	.10	—	8200	3700
	P1001	2480*	.05	2480*	.05	—	21600	6100
	P1001C41	4970*	.05	4970*	.05	—	44800	12300
	P1004A	5860*	.03	5860*	.03	—	43500	11900
	P1001K	2550	.05	2550	.05	—	21000	6700
48"	P1000	850	.22	680	.18	760	6500	3500
	P1001	2380	.13	1900	.10	—	20400	5900
	P1001C41	4770	.13	3820	.10	—	43600	12000
	P1004A	5680*	.07	5550	.07	—	40800	11600
	P1001K	2550	.13	2050	.10	—	18600	6100
60"	P1000	680	.35	540	.28	490	5000	2700
	P1001	1900	.20	1520	.16	—	18900	5600
	P1001C41	3820	.20	3050	.16	—	42000	11500
	P1004A	5550	.13	4440	.10	—	37800	11300
	P1001K	2050	.19	1650	.16	—	15900	5100
72"	P1000	560	.50	450	.40	340	4000	2100
	P1001	1590	.28	1270	.23	—	17000	5100
	P1001C41	3180	.28	2540	.23	—	40000	11100
	P1004A	4630	.19	3700	.15	—	34500	10700
	P1001K	1700	.28	1370	.23	—	12800	4000
84"	P1000	480	.68	390	.54	250	3400	1800
	P1001	1360	.38	1090	.31	1240	14800	4600
	P1001C41	2730	.38	2180	.31	2490	37800	10500
	P1004A	3970	.26	3170	.20	—	30800	9900
	P1001K	1450	.38	1180	.31	1350	9600	3200
96"	P1000	420	.89	340	.71	190	2900	1600
	P1001	1190	.50	950	.40	950	12300	4000
	P1001C41	2380	.50	1910	.40	1900	35100	10000
	P1004A	3470	.33	2780	.27	—	26800	9000
	P1001K	1300	.50	1050	.40	1050	7400	2500
108"	P1000	380	1.12	300	.90	150	2600	1400
	P1001	1060	.63	850	.51	750	9700	3400
	P1001C41	2120	.63	1700	.51	1500	32200	9300
	P1004A	3080	.42	2470	.34	—	22500	7900
	P1001K	1150	.63	920	.51	810	5800	**
120"	P1000	340	1.39	270	1.11	120	2200	1200
	P1001	950	.78	760	.63	610	7900	2900
	P1001C41	1910	.78	1530	.63	1220	28800	8700
	P1004A	2780	.52	2220	.42	2660	18300	6900
	P1001K	1050	.78	820	.63	660	4700	**

*LOAD LIMITED BY SPOT WELD SHEAR **$\frac{KL}{r}$ EXCEEDS (200)

ELEMENTS OF SECTION

CHANNEL	WT./FT. LBS.	AREA OF SECTION SQ. IN.	AXIS 1-1 I In.⁴	AXIS 1-1 S In.³	AXIS 1-1 r In.	AXIS 2-2 I In.⁴	AXIS 2-2 S In.³	AXIS 2-2 r In.
P 1000	1.90	.555	.186	.203	.579	.239	.294	.655
P 1003	3.35	.975	.325	.261	.577	.799	.400	.905
P 1001	3.80	1.110	.930	.572	.915	.478	.588	.656
P 1001 D3	5.70	1.665	1.302	.699	.844	1.450	.892	.933
P 1001 C3	5.70	1.665	1.413	.745	.921	1.521	.788	.956
P 1001 C41	7.60	2.220	1.860	1.145	.915	2.422	1.490	1.044
P 1001 3	5.70	1.665	3.132	1.267	1.371	.717	.882	.656
P 1004 A	6.70	1.950	4.062	1.666	1.443	1.107	1.207	.754
P 1000 K	3.50	1.026	1.005	.618	.989	.286	.352	.528

I — Moment of Inertia S — Section Modulus r — Radius of Gyration

STRENGTH OF P 1010 NUTS USED IN P 1000 CHANNEL

Resistance to Slip — 1500 Lbs. per bolt
Pull Out Strength — 2000 Lbs. per bolt
Minimum Safety Factor of 3

APPLE 15

Grinnell®

Pipe Hangers

Catalog PH-98

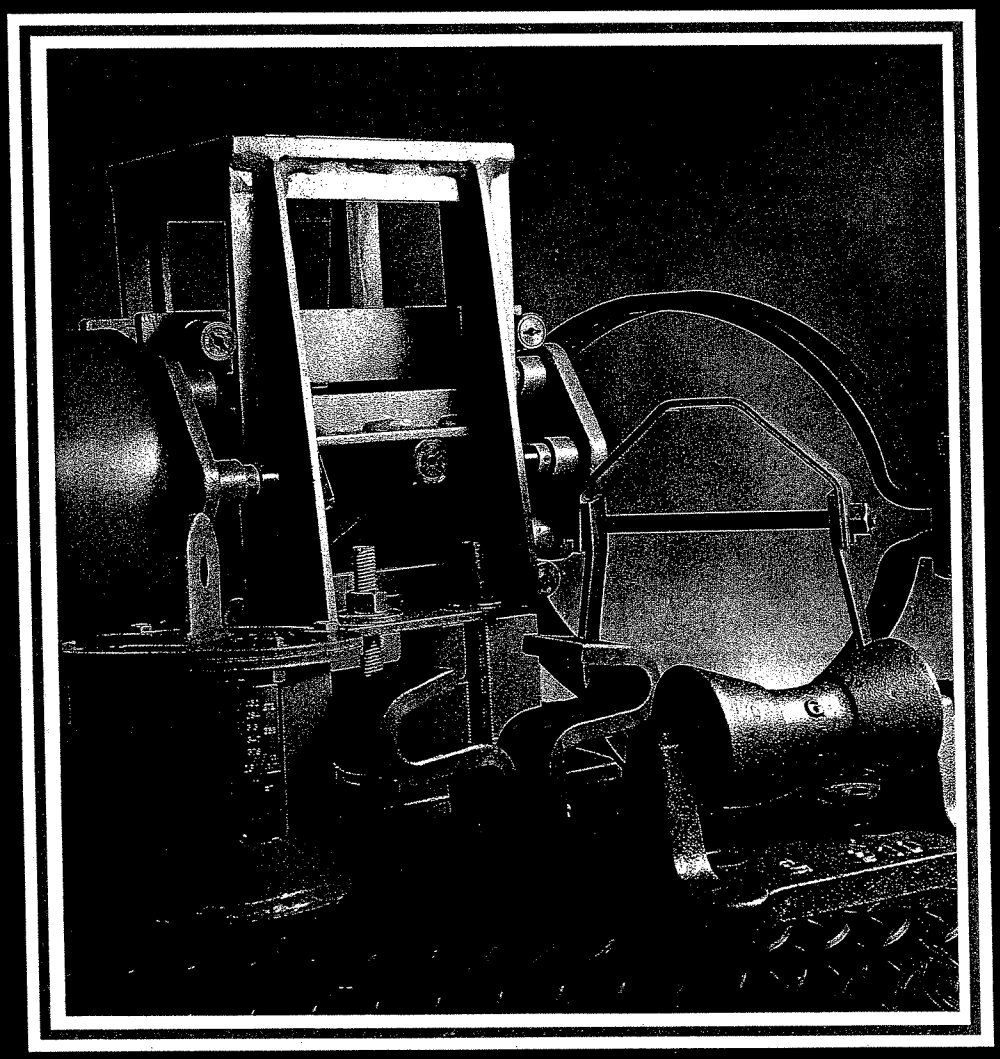

A tyco INTERNATIONAL LTD. COMPANY

*UFS beam clamp with weldless eye nut right-hand thread: fig. 292 left-hand thread: fig. 292L

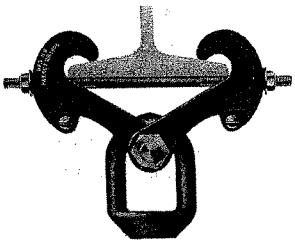

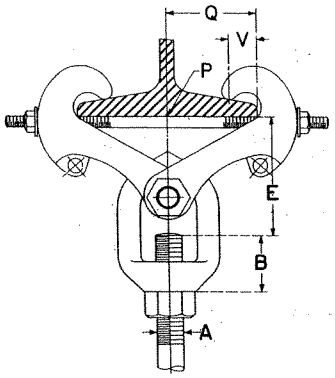

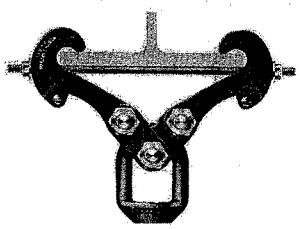

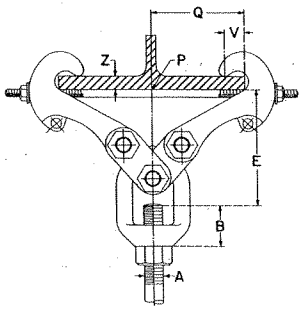

MATERIAL: Forged steel.

FINISH: Black or galvanized.

SERVICE: For suspension of heavy loads from American Standard I-beams and wide flange beams with flange widths to 15 inches and flange thickness to 1.031.

APPROVALS: Complies with Federal Specification WW-H-171E (Type 28 without links; Type 29 with links) and Manufacturers Standardization Society SP-69 (Type 28 without links; Type 29 with links).

INSTALLATION: Fit jaws over edges of lower beam flange and tighten nuts on tie rod to lock clamp in place.

FEATURES:
- Weldless eye nut provides for horizontal pipe movement without binding.
- Weldless eye nut is furnished tapped to any specified size up to the maximum rod size.
- Tie rod assures a tight non-slip fit to the beam.

ORDERING: Specify clamp size, figure number, name, rod size.

NOTE: The application of a load to a structural beam by means of a beam clamp produces a transverse stress, perpendicular to the axis of the beam, in the flange to which the load is applied.

Size per load, beam flange width and rod size

*UFS - Universal Forged Steel

loads • weights • dimensions (inches)

clamp size no.	maximum rod size A	maximum recommended load, lb■	weight (approximate) lbs each	maximum beam flange thickness	B	V	jaw and eye nut size
1	¾	2710	3.9	.60	1¼		292 — 1/1
2	1	4960	9.2	.60	1 11/16	1⅛	292 — 2/2
3•	1	4960	13.0	.60	1 11/16		292 — 2/2
4	1	4960	21.7	1.031	1½		292 — 3/2
5•	1	4960	33.9	1.031	1½	1⅛	292 — 3/2
6	1½	11500	23.9	1.031	2⅛		292 — 3/3
7•	1½	11500	35.8	1.031	2⅛		292 — 3/3
8	2	11500	36.8	1.031	4 9/16	1⅛	292 — 3/4

For reference only. Order by clamp size.

■ Based on the allowable stresses shown in the ASME Code for Pressure Piping.

rod take-out (inches)

clamp size no.	rod take-out, E for width of beam flange 3	4	5	6	7	8	9	10	11	12	13	14	15
1	4½	4 5/16	4 1/16	3⅝	2⅞	....	....	....	....	....	....	....	....
2	....	4¾	4 7/16	4 1/16	3⅜	....	....	....	....	....	....	....	....
3•	....	....	....	....	5 15/16	6	5 5/16	5	....	....	....	....	....
4	....	6 13/16	6⅝	6⅜	5⅞	5⅞	5⅜	4 13/16	....	....	....	....	....
5•	....	....	....	....	....	....	....	....	8⅛	7¾	7⅛	6⅝	6 1/16
6	....	7 3/16	7	6¾	6¼	6 5/16	5 13/16	5 3/16	....	....	....	....	....
7•	....	....	....	....	....	....	....	....	8½	8⅛	7½	7	6 7/16
8	....	8⅝	8 7/16	8 3/16	7¾	7¾	7¼	6⅝	....	....	....	....	....

•Furnished with links.

*Note: See page ph-163 for load capacity of rod.

17

structural welding lug
fig. 55

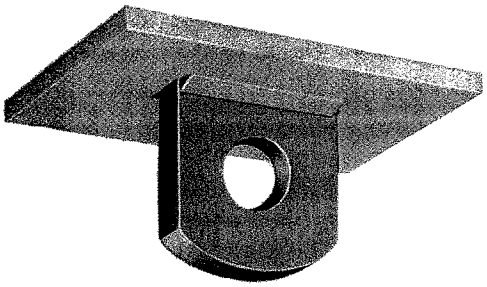

SIZE RANGE: Short lug is available for use with ½ through 3¾ inch rod; long lug may be used with ½ through 2 inch rod.

MATERIAL: Carbon Steel.

FINISH: Black.

SERVICE: For attachment to structural steel in conjunction with the Fig. 299 clevis and with type B and C spring hanger.

APPROVALS: Complies with Manufacturers Standardization Society SP-69 (Type 57).

ORDERING: Specify rod size, figure number, name and whether short or long lug is required.

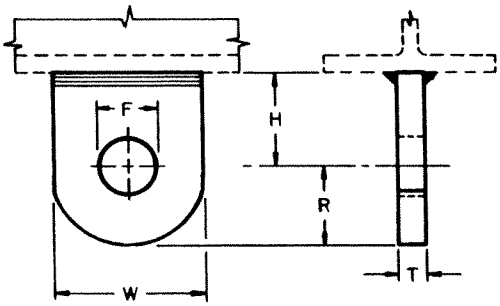

loads • weights • dimensions (inches)

rod size (inches)	maximum recommended load, lb▪		wgt (approx) lbs each		pin or bolt	F	rod take out H		R	T	W
	short	long	short	long			short	long			
½	1130	1130	.48	.75	⅝	11/16	1½	3	1¼	¼	2½
⅝	1810	1810	.41	.68	¾	13/16	1½	3	1¼	¼	2½
¾	2710	2710	.60	1.0	⅞	15/16	1½	3	1¼	⅜	2½
⅞	3770	3770	.71	.98	1	1⅛	2	3	1¼	⅜	2½
1	4960	4960	1.2	1.6	1⅛	1¼	2	3	1½	½	3
1¼	8000	8000	3.0	3.7	1⅜	1½	3	4	2	⅝	4
1½	11630	11630	4.8	6.4	1⅝	1¾	3	4½	2½	¾	5
1¾	15700	15700	4.7	6.3	1⅞	2	3	4½	2½	¾	5
2	20700	20700	7.2	8.8	2¼	2⅜	4	4½	3	¾	6
2¼	27200	...	7.6	...	2½	2⅝	4½	...	3	¾	6
2½	33500	...	15.5	...	2¾	2⅞	4½	...	4	1	8
2¾	41580	...	15.1	...	3	3⅛	4½	...	4	1	8
3	50580	...	16.0	...	3¼	3⅜	5	...	4	1	8
3¼	60480	...	18.9	...	3½	3⅝	5	...	4½	1	9
3½	71280	...	31.3	...	3¾	3⅞	6	...	4½	1½◆	9
3¾	82890	...	35.9	...	4	4⅛	6	...	4½	1¾◆	9

▪ Based on the allowable stresses shown in the ASME Code for Pressure Piping.

pipe roll stand
complete: fig. 271
pipe roll and rod: fig. 272
pipe roll only: fig. 273

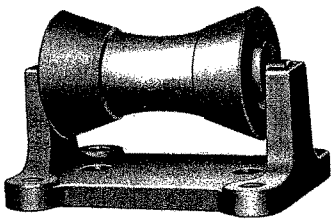

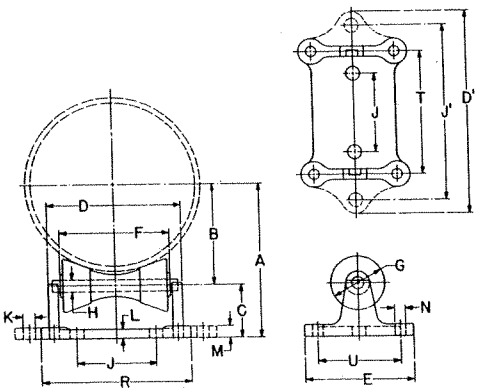

SIZE RANGE: 2 through 42 inch pipe.

MATERIAL: Cast iron roll and stand.

FINISH: Black or galvanized.

SERVICE: For support of pipe where longitudinal movement resulting from expansion and contraction may take place but vertical adjustment is unnecessary.

MAXIMUM TEMPERATURE: 450°F at roller.

APPROVALS: Complies with Federal Specification WW-H-171 E (Type 45) and Manufacturers Standardization Society SP-69 (Type 44).

INSTALLATION:

(1) Two cored holes "K" for anchorage bolts are provided on all sizes for fastening stands to welded stands, to welded steel brackets, structural supports, piers, floors, etc.

(2) In addition, cored holes "N" at the four corners of the stand are provided for anchorage purposes.

(3) The two cored holes "K" on sizes 2 to 6 inch are on outside of stand (see dotted lines and dimension J').

(4) On all other sizes, the holes "K" are inside of uprights (see dimension J).

HOW TO SIZE:

(1) If roll is to support bare pipe, select the size directly from nominal pipe size (see below).

(2) If used with pipe covering protection saddle, see pages ph-74-76 for size of pipe roll.

ORDERING: Specify pipe roll size, figure number, name. Be certain to order oversized rolls where insulation makes this necessary.

NOTE: Standard line of carbon steel base plates available.

loads • weights

pipe size	2 to 3½	4 to 6	8 to 10	12 to 14	16 to 20	24	30	36 to 42
max recom load, lb ■	390	950	2100	3075	4980	6100	7500	12000
complete, fig. 271: wgt (approx) lbs each	6.4	8.9	15.3	28.1	39.7	49.6	99.3	152.0
roll and rod, fig. 272: wgt (approx) lbs each	.9	13.5	5.3	10.1	15.7	19.5	33.9	59.0
roll only, fig. 273: wgt (approx) lbs each	.7	11.0	4.4	8.5	12.7	14.5	24.0	41.0

dimensions (inches)

pipe size	A	B	C	D	D'	E	F	G	H	J	J'	K	L	M	N	R	T	U
2	3½	1¾	1¾	4	8⅜	5⅜	2¾	1⅞	½	...	6⅜	1	9/16	11/16	½	...	3 7/16	4
2½	3⅞	2⅛																
3	4⅛	2⅜																
3½	4⅜	2⅝																
4	4 13/16	2¾	2 1/16	5⅜	9⅞	5⅝	3¾	2 1/16	½	...	7⅞	1	¾	⅞	½	...	4 11/16	4¼
5	5 7/16	3⅜																
6	6 1/16	4																
8	8 11/16	5¼	3 7/16	7¾	...	6⅝	6	3¼	¾	4	...	1	¾	⅞	⅝	8⅝	7	5
10	9 13/16	6⅜																
12	11⅜	7½	3⅞	9⅞	...	7⅞	8	4	⅞	5¾	...	1	¾	⅞	¾	10 15/16	9 1/16	6
14	12	8⅛																
16	13⅝	9⅜	4¼	11¼	...	8⅝	9	4½	1⅛	6¾	...	1	⅞	1	13/16	12⅜	10¼	6½
18	14⅝	10⅜																
20	15⅝	11⅜																
24	17¾	13⅜	4⅜	12½	...	8⅝	10	4 7/16	1¼	7½	...	1	1	1⅛	13/16	13½	11⅜	6½
30	21⅞	16¾	5⅛	15¾	...	10¾	12½	5½	1¾	10	...	1	1¼	1½	1 1/16	17	14¼	8
36	25¾	20	5¾	18¾	...	12	15	6⅜	2	12	...	1	1½	1¾	1 5/16	20	17	9
42	28⅞	23⅛																

■ Based on roll and stand only

pipe covering protection saddle

for nominal thickness of covering:

1 inch: fig. 160
1½ inch: fig. 161
2 inch: fig. 162
2½ inch: fig. 163
3 inch: fig. 164
4 inch: fig. 165
4 inch (Alloy): fig. 165A
5½ inch (Alloy): fig. 166A

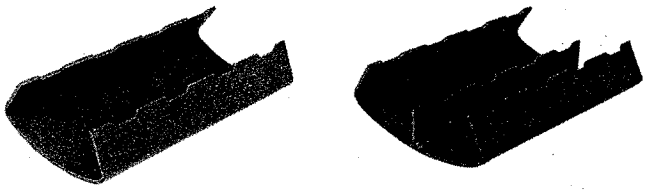

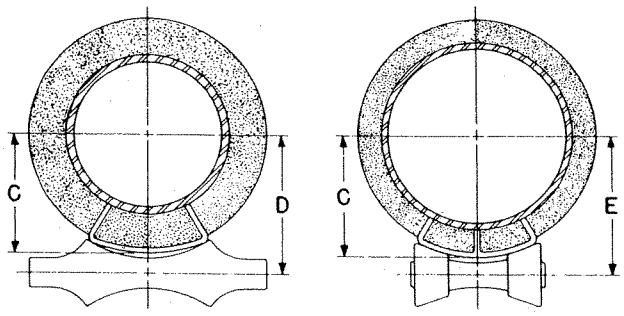

saddle with roll fig. 173 *saddle with roll fig. 273*

SIZE RANGE: For use with ¾ to 36 inch pipe.

MATERIAL: Figs. 160, 161, 162, 163, 164 and 165 are curved carbon steel plate. Figs. 165A and 166A are alloy steel manufactured from ASTM A-387 Grade 22 Chrome Molybdenum steel plate. Figs. 165A and 166A have a welded-in center plate in all sizes. All other saddles have a welded-in center plate for pipe sizes 12 inch and larger. All saddles are 12 inches long with side edges turned up.

SERVICE: Designed for high temperature service or where heat losses are to be kept at a minimum and to protect insulation against damage.

MAXIMUM TEMPERATURE: 650°F Carbon Steel, 950°F Alloy Steel.

APPROVALS: Complies with Federal Specification WW-H-171E (Type 40A or Type 40B) and Manufacturers Standardization Society SP-69 (Type 39A or Type 39B).

FEATURES: Permits finished, weathertight covering at all points of pipe support.

ORDERING: Specify pipe size, figure number, name. Data for 42 inch size available on request.

FINISH: Black.

loads • weights • dimensions (inches)

pipe size	fig. no.	max recom load, lbs	wgt (approx) lbs each	actual thickness of covering	size of pipe roll: figs. 171, 175 177	size of pipe roll: figs. 174, 181	size of pipe roll: figs. 271-277	center line of pipe to outside of saddle C	center line of pipe to center line of roll D: figs. 171, 175 177	center line of pipe to center line of roll D: figs. 174, 181	center line of pipe to center line of roll E
¾	160•	1200	1.4	⅞	2	2½	2-3½	1⅝	2 1/16	2⅛	2¼
	161•	1200	2.1	1 7/16	3	3½	2-3½	2 3/16	2¾	2¾	2⅞
	162•	1200	2.8	1⅞	4	5	2-3½	2 11/16	3 5/16	3 5/16	3⅜
1	160•	1200	1.4	1 1/16	2½	3	2-3½	1 13/16	2 5/16	2¼	2 7/16
	161•	1200	2.1	1 9/16	3	4	2-3½	2 5/16	2⅞	2⅞	3
	162•	1200	2.8	2⅛	4	5	2-3½	2⅞	3½	3½	3½
1¼	160	1200	1.4	⅞	2½	3	2-3½	1 15/16	2½	2 7/16	2 9/16
	161•	1200	2.1	1⅝	3½	5	2-3½	2 9/16	3 1/16	3 1/16	3 3/16
	162•	1200	2.8	1 15/16	4	5	2-3½	3	3⅝	3⅝	3 11/16
	163•	1200	3.6	2 7/16	5	6	4-6	3¾	4⅜	4⅜	4⅜
1½	160	1200	1.5	1	3	3½	2-3½	2⅛	2⅝	2⅝	2 11/16
	161•	1200	2.1	1½	3½	5	2-3½	2⅝	3¼	3¼	3 5/16
	162•	1800	3.2	2 5/16	5	6	4-6	3 5/16	4	4	3⅞
	163•	1800	3.6	2 13/16	6	8	4-6	3⅞	4½	4⅝	4½
2	160	1200	1.7	1 1/16	3½	4	2-3½	2⅜	3	2 15/16	3 1/16
	161•	1200	2.3	1 9/16	4	5	2-3½	2⅞	3½	3½	3 9/16
	162•	1800	3.2	2⅛	5	6	4-6	3 9/16	4¼	4¼	4 3/16
	163•	1800	3.6	2⅝	6	8	4-6	4 1/16	4¾	4 13/16	4¾
	164•	1800	4.5	3⅛	8	8	4-6	4 9/16	5⅜	5⅜	5¼

continued next page

■ Maximum recommended loads are applicable only when saddle is used on a flat bearing surface and tack welded to pipe. When saddle is used with a pipe roll, the maximum load for the assembly is the smaller of the two loads.
• Saddles may require notching when used with a U-bolt.

loads • weights • dimensions (inches) *(continued)*

pipe size	fig. no.	max recom load, lb■	wgt (approx) lbs each	actual thickness of covering	size of pipe roll: figs. 171, 175 177	size of pipe roll: figs. 174, 181	size of pipe roll: figs. 271-277	center line of pipe to outside of saddle, C	center line of pipe to center line of roll, D: figs. 171, 175 177	D: figs. 174, 181	E
2½	160	1200	1.7	1 1/16	3½	5	2- 3½	2 11/16	3¼	3¼	3 5/16
	161•	1200	2.8	1⅞	5	6	4- 6	3 5/16	4	4	3 15/16
	162•	1200	3.2	2 5/16	6	8	4- 6	3⅞	4½	4⅝	4½
	163•	1200	4.1	2⅞	8	8	4- 6	4¼	5⅛	5⅛	5
	164•	1200	4.5	3⅜	8	10	4- 6	4⅞	5⅝	5¾	5½
3	160	1200	1.9	1	4	5	2- 3½	2 15/16	3½	3½	3 9/16
	161	1200	2.8	1 9/16	5	6	4- 6	3⅝	4 5/16	4 5/16	4¼
	162•	1200	3.6	2 1/16	6	8	4- 6	4⅛	4 13/16	4 13/16	4 11/16
	163•	1200	4.1	2 9/16	8	8	4- 6	4 11/16	5 7/16	5 7/16	5 5/16
	164•	1200	4.9	3 1/16	8	10	8-10	5 1/16	6	6	6 1/16
3½	160	1200	2.3	1¼	5	6	4- 6	3 5/16	4	4	3 15/16
	161	1200	3.2	1 13/16	6	8	4- 6	3 11/16	4 9/16	4 9/16	4½
	162•	1200	3.6	2¼	8	8	4- 6	4 5/16	5⅛	5⅛	5
	163•	1200	4.5	2¾	8	10	8-10	4 11/16	5⅝	5⅝	5 11/16
	164•	1200	4.9	3 5/16	10	10	8-10	5⅜	6 5/16	6 5/16	6⅜
4	160	1200	2.3	1 1/16	5	6	4- 6	3 9/16	4¼	4¼	4 3/16
	161	1200	3.2	1 9/16	6	8	4- 6	4 1/16	4⅞	4⅞	4¾
	162	1200	3.6	2 1/16	8	8	4- 6	4 9/16	5⅜	5⅜	5¼
	163	1200	4.5	2 9/16	8	10	8-10	5	5 15/16	5 15/16	6
	164•	1200	4.9	3 1/16	10	10	8-10	5⅝	6 9/16	6 9/16	6⅝
	165•	1200	6.1	4 1/16	10	12	12-14	6½	7⅝	7⅝	7 9/16
	165A•	7200	11.6	4 1/16	10	12	12-14	6½	7⅝	7⅝	7 9/16
	166A•	7200	15.7	5 11/16	14	16	12-14	8⅛	9⅝	9½	9 5/16
5	160	1200	2.3	1	6	8	4- 6	4⅛	4 13/16	4 13/16	4¾
	161	1200	3.2	1½	8	8	4- 6	4 11/16	5½	5½	5⅜
	162	1200	3.6	2	8	10	8-10	5 3/16	6	6 1/16	6⅛
	163	1200	4.5	2 9/16	10	10	8-10	5⅝	6 9/16	6 9/16	6⅝
	164	1200	4.9	3 1/16	10	12	8-10	6 3/16	7⅛	7¼	7¼
	165•	1200	6.1	4 3/16	12	14	12-14	7⅛	8 3/16	8⅜	8 3/16
	165A•	7200	11.6	4 3/16	12	14	12-14	7⅛	8⅛	8⅜	8 3/16
	166A•	7200	15.7	5 11/16	16	16	12-14	8 11/16	10 1/16	10 1/16	9⅞
6	160	1800	3.8	1	8	8	4- 6	4½	5⅜	5⅜	5¼
	161	1800	4.4	1½	8	10	8-10	5 1/16	5⅞	5 11/16	6
	162	1800	5.7	2	10	10	8-10	5½	6 7/16	6 7/16	6½
	163	1800	6.5	2½	10	12	8-10	6 3/16	7⅛	7 3/16	7¼
	164	1800	7.7	3	12	12	8-10	6 9/16	7⅝	7⅝	7⅝
	165•	1800	10.2	4⅛	14	16	12-14	7 9/16	9	9	8¾
	165A•	7200	12.9	4⅛	14	16	12-14	7⅝	9⅛	9	8 13/16
	166A•	7200	16.3	5⅝	16	18	16-20	9⅛	10⅝	10 9/16	10 7/16
8	161	1800	5.8	1½	10	12	8-10	6	7 1/16	7 1/16	7 1/16
	162	1800	6.3	2	10	12	8-10	6½	7 9/16	7 9/16	7 9/16
	163	1800	7.2	2 11/16	12	14	8-10	7¼	8 5/16	8½	8 5/16
	164	1800	7.7	3⅛	14	16	12-14	7 11/16	9	9	8¾
	165	1800	10.2	4 3/16	16	18	16-20	8 11/16	10⅛	10⅛	9⅞
	165A	7200	16.9	4 3/16	16	18	16-20	8 11/16	10 1/16	10⅛	9⅞
	166A•	7200	22.6	5⅝	18	20	16-20	10¼	11⅞	11 13/16	11⅝
10	161	1800	5.8	1 9/16	12	14	8-10	7¼	8 5/16	8½	8 5/16
	162	1800	7.7	2 1/16	14	16	12-14	7⅝	9 1/16	9	8 13/16
	163	1800	8.2	2 9/16	14	16	12-14	8⅛	9 9/16	9 9/16	9 5/16
	164	1800	8.8	3 1/16	16	18	16-20	8 11/16	10⅛	10 1/16	10
	165	1800	10.8	4 1/16	18	20	16-20	9¾	11¼	11¼	11⅛
	165A	7200	18.9	4 1/16	18	20	16-20	9 11/16	11 5/16	11¼	11⅛
	166A•	7200	24.3	5 9/16	20	...	22-24	11⅛	12 15/16	...	12½

continued next page

■ Maximum recommended loads are applicable only when saddle is used on a flat bearing surface and tack welded to pipe. When saddle is used with a pipe roll, the maximum load for the assembly is the smaller of the two loads.

• Saddles may require notching when used with a U-bolt.

loads • weights • dimensions (inches) *(continued)*

pipe size	fig. no.	max recom load, lb■	wgt (approx) lbs each	actual thickness of covering	size of pipe roll: figs. 171 177	size of pipe roll: fig. 181	size of pipe roll: figs. 271-277	center line of pipe to outside of saddle, C	center line of pipe to center line of roll, D: figs. 171, 177	center line of pipe to center line of roll, D: fig. 181	center line of pipe to center line of roll, E
12	161	5000	7.8	1 9/16	14	16	12-14	8 1/16	9 1/2	9 1/2	9 1/4
	162	5000	9.9	2 1/16	16	18	16-20	8 5/8	10 3/16	10 1/16	10
	163	5000	10.5	2 5/8	16	18	16-20	9 1/8	10 11/16	10 9/16	10 1/2
	164	5000	11.4	3 1/16	18	20	16-20	9 5/8	11 1/8	11 1/8	11
	165	5000	14.0	4 1/8	20	...	16-20	10 13/16	12 3/8	...	12 3/16
	165A	11140	28.0	4 1/8	20	...	16-20	11	12 1/2	...	12 3/8
	166A	11140	35.5	5 9/16	24	...	22-24	12 5/16	14 1/4	...	13 11/16
14	161	5000	7.8	1 1/2	16	18	12-14	8 3/4	10 3/16	10 1/8	10 1/16
	162	5000	9.9	2	16	18	16-20	9 5/16	10 7/8	10 13/16	10 11/16
	163	5000	10.5	2 1/2	18	20	16-20	9 7/8	11 5/16	11 3/8	11 3/16
	164	5000	11.4	3	18	20	16-20	10 5/16	11 3/4	11 3/4	11 5/8
	165	5000	14.0	4	20	...	22-24	11 5/16	12 7/8	...	12 5/8
	165A	11140	27.6	4	20	...	22-24	11 9/16	13 1/16	...	12 7/8
	166A	11140	35.5	5 1/2	24	...	22-24	12 7/8	14 3/4	...	14 1/4
16	161	5000	8.4	1 1/2	18	20	16-20	9 13/16	11 1/4	11 1/4	11 1/8
	162	5000	10.4	2	18	20	16-20	10 3/16	11 3/16	11 3/4	11 9/16
	163	7200	11.1	2 1/2	20	...	16-20	10 13/16	12 5/16	...	12 3/16
	164	7200	13.3	3	24	...	22-24	11 1/16	12 7/8	...	12 7/16
	165	7200	15.3	4	24	...	22-24	12 3/16	14 1/8	...	13 5/8
	165A	11140	30.1	4	24	...	22-24	12 7/16	14 5/16	...	13 7/8
	166A	11140	40.0	5 1/2	30	...	26-30	13 13/16	16 5/8	...	15 5/8
18	161	5000	9.1	1 1/2	20	...	16-20	10 13/16	12 5/16	...	12 3/16
	162	7200	10.4	2	20	...	22-24	11 5/16	12 7/8	...	12 11/16
	163	7200	12.4	2 1/2	24	...	22-24	11 5/8	13 9/16	...	13 1/16
	164	7200	13.3	3	24	...	22-24	12 1/4	14 3/16	...	13 5/8
	165	7200	15.3	4	24	...	22-24	13 5/16	15 1/4	...	14 3/4
	165A	13370	40.3	4	24	...	22-24	13 3/4	15 11/16	...	15 1/8
	166A	13370	52.1	5 1/2	30	...	26-30	14 7/8	17 5/8	...	16 5/8
20	161	7200	10.4	1 1/2	24	...	22-24	11 5/8	13 9/16	...	13 1/16
	162	7200	11.6	2	24	...	22-24	12 1/4	14 1/8	...	13 5/8
	163	7200	12.4	2 1/2	24	...	22-24	12 3/4	14 11/16	...	14 3/16
	164	7200	13.4	3	24	...	22-24	13 5/16	15 1/4	...	14 3/4
	165	7200	22.8	4	30	...	26-30	14 1/8	17	...	15 7/8
	165A	13370	44.8	4	30	...	26-30	14 3/8	17 3/16	...	16 1/8
	166A	13370	52.1	5 1/2	30	...	26-30	16 1/8	18 15/16	...	17 7/8
24	161	7200	12.3	1 1/2	30	...	26-30	13 1/2	16 5/16	...	15 1/4
	162	7200	13.4	2	30	...	26-30	14	16 7/8	...	15 3/4
	163	7200	14.3	2 1/2	30	...	26-30	14 5/8	17 1/2	...	16 7/16
	164	7200	20.3	3	30	...	26-30	15 1/4	18 1/16	...	17
	165	7200	23.1	4	30	...	26-30	16 7/16	19 1/4	...	18 3/16
	165A	13370	45.4	4	30	...	26-30	16 11/16	19 1/2	...	18 7/16
	166A	13370	52.1	5 1/2	...	...	26-30	18	...	...	19 3/4
30	161	7200	13.3	1 1/2	...	...	36-42	16 15/16	...	...	18 7/8
	162	7200	14.0	2	...	...	36-42	17 1/2	...	...	19 3/8
	163	7200	20.0	2 1/2	...	...	36-42	18 1/16	...	...	19 15/16
	164	7200	21.4	3	...	...	36-42	18 5/8	...	...	20 1/2
	165	7200	24.0	4	...	...	36-42	19 11/16	...	...	21 1/2
	165A	13370	47.9	4	...	...	36-42	19 15/16	...	...	21 3/4
	166A	13370	55.6	5 1/2	...	...	36-42	21 1/2	...	...	23 3/8
36	161	7200	18.0	1 1/2	...	...	36-42	20 1/4	...	...	22 1/8
	162	7200	18.9	2	...	...	36-42	20 15/16	...	...	22 5/8
	163	7200	20.2	2 1/2	...	...	36-42	21 5/16	...	...	23 3/16
	164	7200	21.6	3	...	...	36-42	21 7/8	...	...	23 11/16
	165	7200	24.1	4	...	...	36-42	22 7/8	...	...	24 11/16
	165A	13370	48.3	4	...	...	36-42	23 1/8	...	...	25
	166A	13370	55.8	5 1/2	...	...	36-42	24 5/8	...	...	26 1/2

■ Maximum recommended loads are applicable only when saddle is used on a flat bearing surface and tack welded to pipe. When saddle is used with a pipe roll, the maximum load for the assembly is the smaller of the two loads.
• Saddles may require notching when used with a U-bolt.

TOLCO
INCORPORATED
CORONA, CA (909)737-5599

Fig. 116
Bevel Washer

Size Range—3/8 thru 7/8 inch bolt.
Material—Malleable Iron.
Function—Designed to match taper of flange of I-beam or channel to permit right angle fastening of bolt.
Finish—Plain.
Note—Available in Electro-Galvanized and HDG finish or Stainless Steel materials.
Order By—Figure number, size, and finish.

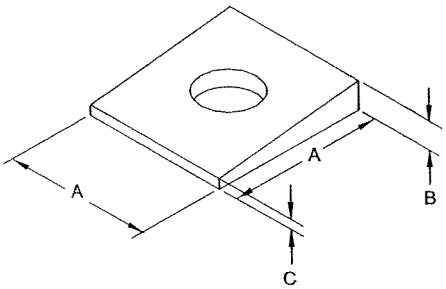

BOLT SIZE	A	B	C	APPROX. WT./100
3/8	1-1/4	11/32	5/32	9
1/2	1-1/4	11/32	5/32	9
5/8	1-1/2	13/32	5/32	14
3/4	1-1/2	15/32	7/32	16
7/8	2	9/16	7/32	33

Fig. 118
Square Washer

Size Range—3/8 thru 1 inch bolt.
Material—Carbon Steel.
Function—Heavy duty washer for use on top of channels or angles to support hanger rod.
Finish—Plain.
Note—Available in Electro-Galvanized and HDG finish or Stainless Steel materials.
Order By—Figure number, size, and finish.

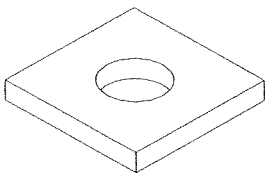

ROD SIZE	HOLE SIZE	APPROX. WT./100
3/8	7/16	27
1/2	9/16	27
5/8	11/16	47
3/4	13/16	42
7/8	15/16	85
1	1-1/8	160

Fig. 119
Fender or Oversized Washer

Size Range—1/4 thru 1/2 inch bolt.
Material—Carbon Steel.
Function—To provide a greater bearing surface than standard washer.
Finish—Electro-Galvanized.
Order By—Figure number and size.

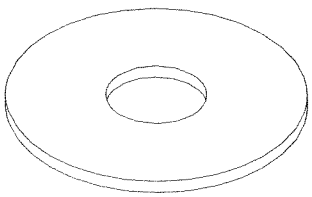

ROD SIZE	INSIDE DIAMETER	OUTSIDE DIAMETER	APPROX. WT./100
1/4	5/16	1-1/2	3.3
3/8	7/16	1-1/2	3.0
1/2	9/16	2	2.8

TOLCO
INCORPORATED
CORONA, CA (909)737-5599

Fig. 113 Standard Hex Nut

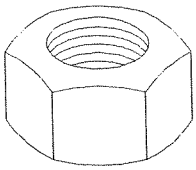

Size Range—1/4 thru 1-1/2 inch.
Material—Carbon Steel.
Finish—Plain.
Note—Available in Electro-Galvanized and HDG finish or Stainless Steel materials.
Order By—Figure number, size, and finish.

ROD SIZE	WIDTH ACROSS FLATS	WIDTH ACROSS POINTS	THICKNESS	APPROX. WT./100
1/4	7/16	1/2	7/32	.7
5/16	1/2	37/64	17/64	1.1
3/8	9/16	21/32	21/64	1.6
1/2	3/4	55/64	7/16	3.7
5/8	15/16	1-3/32	35/64	7.3
3/4	1-1/8	1-5/16	41/64	12
7/8	1-5/16	1-33/64	3/4	19
1	1-1/2	1-3/4	55/64	28
1-1/4	1-7/8	2-11/64	1-1/16	54
1-1/2	2-1/4	2-19/32	1-9/32	94

Fig. 114 Heavy Hex Nut

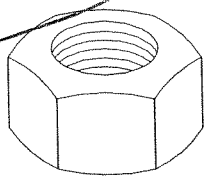

Size Range—1/4 thru 1-1/2 inch.
Material—Carbon Steel.
Finish—Plain.
Note—Available in Electro-Galvanized and HDG finish or Stainless Steel materials.
Order By—Figure number, size, and finish.

ROD SIZE	WIDTH ACROSS FLATS	WIDTH ACROSS POINTS	THICKNESS	APPROX. WT./100
1/4	1/2	37/64	15/64	1.2
5/16	9/16	21/32	19/64	1.7
3/8	11/16	51/64	23/64	3.1
1/2	7/8	1-1/64	31/64	6.5
5/8	1-1/16	1-15/64	39/64	12
3/4	1-1/4	1-29/64	47/64	19
7/8	1-7/16	1-21/32	55/64	30
1	1-5/8	1-7/8	63/64	43
1-1/4	2	2-5/16	1-7/32	79
1-1/2	2-3/8	2-3/4	1-15/32	131

Fig. 115 Flat Washer

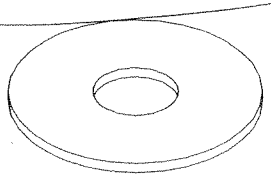

Size Range—1/4 thru 1-1/2 inch bolt.
Material—Carbon Steel.
Finish—Plain.
Note—Available in Electro-Galvanized and HDG finish or Stainless Steel materials.
Order By—Figure number, size, and finish.

ROD SIZE	OUTSIDE DIAMETER	APPROX. WT./100
1/4	3/4	.7
3/8	1	1.5
1/2	1-3/8	3.9
5/8	1-3/4	7.7
3/4	2	11
7/8	2-1/4	15
1	2-1/2	19
1-1/8	2-3/4	22
1-1/4	3	26
1-1/2	3-1/2	39

Fig. 117 Lock Washer

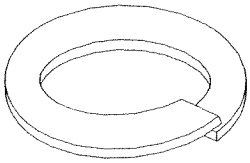

Size Range—3/8 thru 3/4 inch bolt.
Material—Carbon Steel.
Finish—Plain.
Note—Available in Electro-Galvanized and HDG finish or Stainless Steel materials.
Order By—Figure number, size, and finish.

ROD SIZE	OUTSIDE DIAMETER	APPROX. WT./100
3/8	11/16	.6
1/2	7/8	1.3
5/8	1-1/6	2.4
3/4	1-1/4	4.0

TOLCO
INCORPORATED
CORONA, CA (909)737-5599

Fig. 98
Rod Stiffener

Size Range—Secures 3/8 thru 7/8 inch hanger rod.
Material – Carbon Steel.
Function—Secures channel to hanger rod for vertical seismic bracing.
Finish—Electro Galvanized.
Order By—Figure number.
Note—Available in HDG finish or Stainless Steel materials.

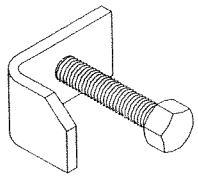

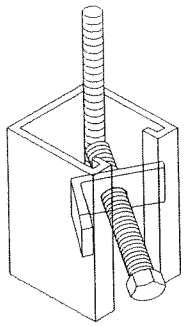

Fig. 99
All Thread Rod Cut To Length

Size Range—3/8 thru 7/8 inch rod in 1 inch increments.
Material – Carbon Steel.
Maximum Temperature—750°F.
Finish— Plain.
Order By—Figure number, rod diameter, rod length, and finish.
Note—Available in Electro-Galvanized and HDG finish or Stainless Steel materials.

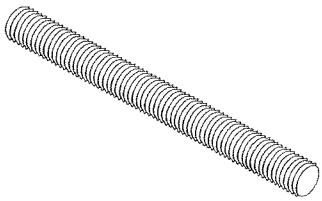

ROD SIZE	MAX. REC. LOAD LBS. FOR SERVICE TEMPS 650°F	750°F
3/8	610	540
1/2	1130	1010
5/8	1810	1610
3/4	2710	2420
7/8	3770	3360

Fig. 100
All Thread Rod Full Lengths

Size Range—3/8 thru 7/8 inch rod in 10 foot lengths.
Material – Carbon Steel.
Maximum Temperature—750°F.
Finish— Plain.
Order By—Figure number, rod diameter, and finish.
Note—Available in Electro-Galvanized and HDG finish or Stainless Steel materials.

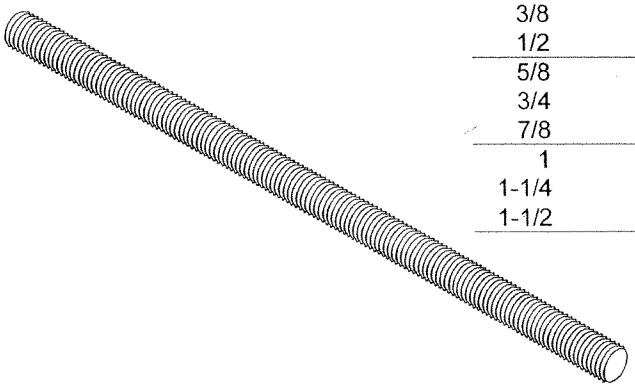

ROD SIZE	MAX. REC. LOAD LBS. FOR SERVICE TEMPS 650°F	750°F	APPROX. WEIGHT PER 100FT.
1/4	240	215	12
3/8	610	540	29
1/2	1130	1010	53
5/8	1810	1610	84
3/4	2710	2420	123
7/8	3770	3360	169
1	4960	4420	222
1-1/4	8000	7140	360
1-1/2	11630	10370	510

TOLCO
INCORPORATED
CORONA, CA (909)737-5599

Fig. 982
Cable Sway Brace Attachment

Size Range – One size fits 1/8 thru 1/4 inch pre-stretched cable.
Material – Carbon Steel.
Function – Multi-functional attachment for sway bracing; attaches sway brace to structure or to hanger. To be used with 7 x 19 strand core pre-stretched galv. aircraft cable and cable clamps (sold separately) as shown in the details below.
Features— Attachment will fit multiple sizes of cable. Will mount to any surface angle.
Finish – Electro-Galvanized.
Order By – Figure number, hole size and finish.

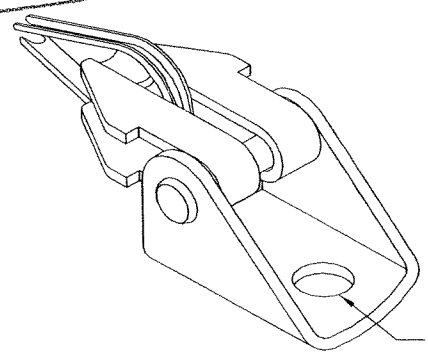

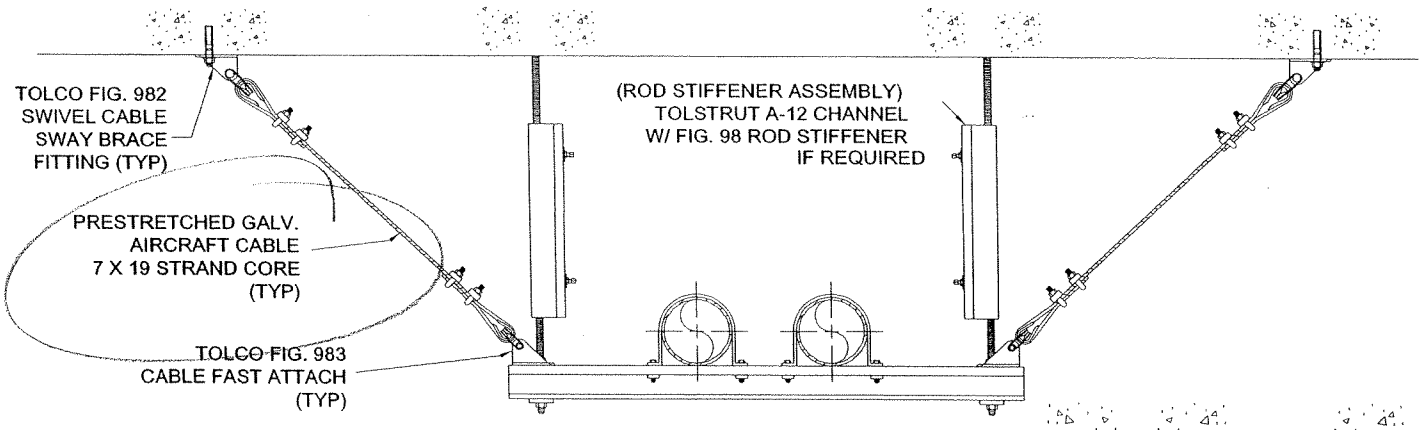

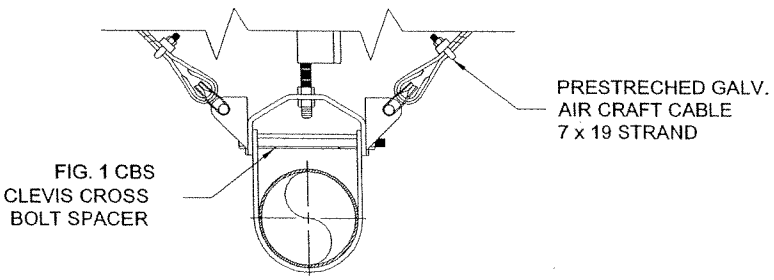

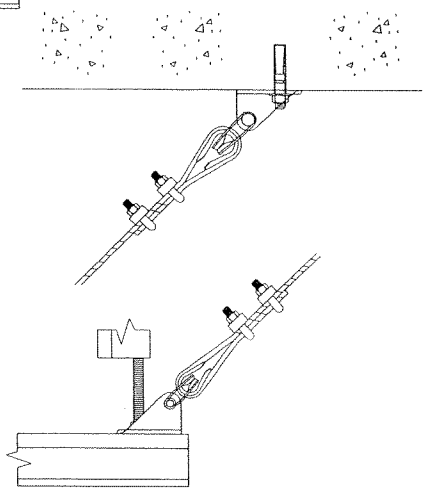

Cable Diameter	Maximum Load Lbs.
1/8"	975*
3/16"	2050*
1/4"	2589

*Maximum load rating based on cable breaking strength