HMR

STRUCTURAL CALCULATION COVER SHEET

Date: 10-16-01

Calculation No:3442.053.SCAL.004,
Calculation Title: LDCC MEZZANINE SUPPORT FOR 4" DIA PIPES
Project ID # 100256
Project Title: CCN CHILLED WATER SYSTEM OPTIMIZATION MASTER PLAN

ORIGINAL AND REVISED CALCULATION/ANALYSIS APPROVAL

	Rev. A Name/Signature/Date	Rev. 0 Name/Signature/Date	Rev._ Name/Signature/Date
Originator: DAVID APPLE	10/16/01	8-29-02	
Checked By: JIM WEEKS	10/16/01	8-29-02	
Approved By: JIM WEEKS	10/16/01	8-29-02	
Other:			

AFFECTED DOCUMENTS

Document Number	Document Title	Rev. Number
Drawing No. C52952	CCN Chilled Water System Optimization Master Plan	T1, M1-M33 Rev. B E1-E14 Rev. A
Drawing No. C52952	CCF/LDCC Cooling Plant Modifications	Rev. 0
Drawing No. C53116	LDCC EC-1 Modifications	Rev. 0

Record of Revision

Rev.	Reason for Revision
REV A	FIRST SUBMITTAL OF CALCULATIONS
Rev. 0	All pages of this calculation 3442.053.SCAL.004 Rev.A are considered Rev.0, approved and released based upon no technical changes to the calculation during/after formal review!

HNR Holmes & Narver | Raytheon **STRUCTURAL DESIGN CALCULATION SHEET**	Project Title: CCN CHILLED WATER SYSTEM OPTIMIZATION MASTER PLAN Project ID #100256 Task Order # 053

2 of 32

Calculation No. 3442.053.SCAL.004	PERFORMED BY : _____ 10/16/01 DAVID APPLE
Rev. No. A	CHECKED BY : _____ 10/16/01 JIM WEEKS
Calculation Title: LDCC MEZZANINE SUPPORT FOR 4" DIA PIPES	

INTRODUCTION Purpose	Provide pipe support design for 1 - 4" or 2 - 4" diameter steel pipes supported from mezzanine framing members or new framing members as required.
Scope	Design pipe supports for 4" diameter steel pipes, as required, to support pipes running to EC-1 unit outside of LDCC building.
DESIGN BASIS Design Inputs	The LDCC facility is considered a Performance Category (PC) 1 facility. Piping and component weights provided by Mechanical Engineer and from manufacturers printed information.
Criteria	LANL Facility Engineering Manual, Chapter 5 (Ref. 1) LANL Specification Section 13085, Seismic Protection (Ref. 2)
Assumptions	The capacity of the third floor mezzanine framing system is adequate to carry the additional loads imposed by this piping project.
REFERENCES	(1) LANL Facility Engineering Manual, Chapter 5 (2) LANL Specification Section 13085, Seismic Protection (3) ASCE 7-98 (4) AISC Manual of Steel Construction, 9th Edition (5) IBC 2000 (6) DOE-STD-1020-94
METHODS	Hand calculations were used to prepare these calculations.
RESULTS AND CONCLUSIONS	Design calculations and details have been provided to support piping for this project.

Holmes & Narver | Raytheon

CALCULATION CHECKLIST

Task/Project #: 100256
Task Order 053
CCN CHILLED WATER SYSTEM OPTIMIZATION MASTER PLAN

Calculation Number: 3442.053.SCAL.004 3 of 32 | Revision A

Reviewer/Checker : JIM WEEKS

Reviewer performed ~~or supervised~~ subject calculation.
_____NO __X__YES Justification Attachment _____, _____ pages

Alternate Verification method approved _____ Method _____

Date 10/15/01

ITEM(S) CHECKED	Accept Y/N	OBJECTIVE EVIDENCE Sheets		INITIAL/ DATE
1. Cover forms properly completed.	Y			10/15
2. Calculation Sheet headers complete with calc. no., rev., etc.	Y			10/15
3. Calculation Sheet contents complete per format.	Y			10/15
4. Listed attachments included.	Y			10/15
5. Calculation Objective clearly described.	Y			10/15
6. Criteria are suitable and properly referenced to task-specific documents.	Y			10/15
7. Assumptions and data described and attached or referenced to task documents.	Y			10/15
8. Calculation method identified and appropriate for the design activity.	Y			10/15
9. Calculation results reasonable and correctly described in Results and Conclusions.	Y			10/15
10. Computer Program identified with version and revision.	N/A			
11. Computer Program references method used, etc.	N/A			
12. Computer input/output provided.	N/A			
13. Computer run traceable to calculation.	N/A			
14. Computer input data within permissible design input range.	N/A			
15. Computer Program validation/verification addressed.	N/A			

REMARKS

Checker Print Name & Sign
JIM WEEKS

Date 10/15/01

Preparer Print Name & Sign
DAVID APPLE

Date 10-16-01

CHECKED [illegible] DATE 10/13

APPROVED [illegible] DATE 10/13

Holmes & Narver
ARCHITECTS - ENGINEERS
6501 Americas Parkway NE Suite 700
Albuquerque, NM 87110

JOB NO. 034103442.0053
3442-053-SCAL-004 REV. A

SHEET 4 OF 32

TITLE LDCC Mezzanine Support for 4" Dia Pipes
CCN CHILLED WATER SYSTEM OPTIMIZATION MASTER PLAN

BY DAA DATE 9-30-01

#100256

Consider 2 ~ 4" Ø Sch 40 pipe (CWS, CWR)

Per Mechanical Spec 301-2.3.8 : (M23 plan set)

4-6" Ø pipe horizontal supports @ 10' spacing

Mezzanine framing @ 15' O.C. parallel to lines (B), (C)

⇒ provide intermediate support to limit spacing to 7.5 ft ≤ 10 ft. ⇒ ok.

Plans of 2nd Level Framing (S4, attached):

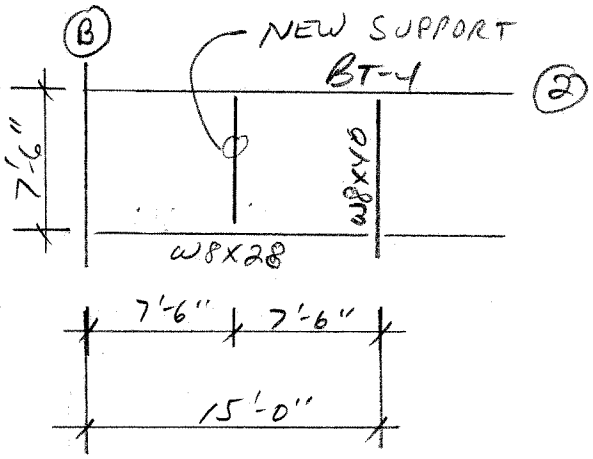

EXT FRAMING is at same elev. (+1'-6") from elev. 117.50 (per plans S4) ok. ✓

FORM 8X8

CHECKED [illegible] DATE 10/3

APPROVED [illegible] DATE 10/3

Holmes & Narver
ARCHITECTS - ENGINEERS
6501 Americas Parkway NE Suite 700
Albuquerque, NM 87110

JOB NO. 034103 442.0053
3442.053-SCAL-004 REV. A
SHEET 5 OF 32

TITLE LDCC MEZZANINE SUPPORT FOR 4" DIA. PIPES
CCN CHILLED WATER SYSTEM OPTIMIZATION MASTER PLAN
#100256

BY AAA DATE 9-30-01

Tabulate 4"Ø pipe & fitting weights:

4"Ø sch. 40 pipe: pipe = 10.79 plf water = 5.51 plf

(6) insulation = 3.61 plf (t = 2" or less)

w_4 4"Ø = 19.9 plf ⇒ USE w_4 = 20 plf

(✓) 4" coupling = 4.8 lbs each, use 5 lbs each

(✓) 4" 90° elbow = 8.5 lbs

(✓) Adapters for elbow = 7.7 lbs each, 2 pcs. = 15 lbs } 25 lbs

Load for this condition:

2 ~ 4"Ø × 7.5 ft = 2(7.5) w_4 = 2(7.5)(20 plf) = 300 lbs

4 ~ 4" couplings = 4(5 lbs) = 20 lbs

2 ~ 4" 90° elbow + adapters = 2(8.5 + 15) = 50 lbs

(25)

320 lbs

Pipe rolls @ 15 lbs each - 2 req'd = 30 lbs

400 lbs

Total weight to support = 400 lbs,
plus support self-weight.

Span = 7'-6" (90")

P5000 channel @ 96" span:

carries 1040 plf or 0.5(1040) = 502 lbs @ ℄ ↓ OK.

∴ USE P5000 Channel. Attach to framing members w/ 1/2"Ø A325 bolt @ each end.

FORM 8X8

CHECKED Ø DATE 10/13

APPROVED Ø DATE 10/13

Holmes & Narver
ARCHITECTS - ENGINEERS
6501 Americas Parkway NE Suite 700
Albuquerque, NM 87110

JOB NO. 034103 442.0053
3442.053.SCAL.004 REV.A

SHEET 6 OF 32

TITLE LDCC MEZZANINE SUPPORT FOR 4" DIA. PIPES BY OAA DATE 9-30-01
CCN CHILLED WATER SYSTEM OPTIMIZATION MASTER PLAN
#100256

REVISED ON 10-10-01
SEE SHEETS 18, 19.

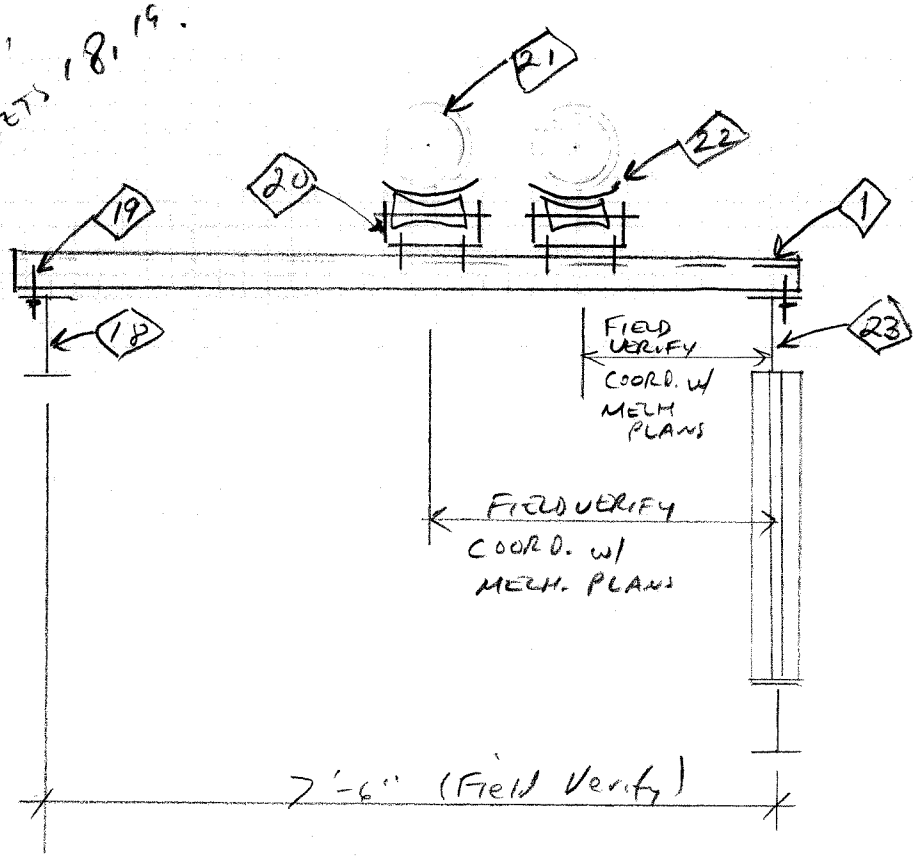

18. W8x28 Framing Member
19. 1/2"Ø bolt, nut, typical each end of horizontal member.
20. fig. 271, 8"Ø, attach per manufacturer recommendations.
21. 4"Ø sch. 40 pipe w/ 1½" insulation. See Mechanical sheets ~~for~~ information.
22. Insulation shield, fig. 167, 9A
23. BT-4 Truss

PIPE SUPPORT FOR 2 ~ 4"Ø PIPES

FORM 8X8

CHECKED _____ DATE 10/15/01

APPROVED _____ DATE 10/15/01

Holmes & Narver
ARCHITECTS - ENGINEERS
6501 Americas Parkway NE Suite 700
Albuquerque, NM 87110

JOB NO. 034103442.0053
3442.053.SCAL.004 REV.A
SHEET 7 OF 32

TITLE LDCC - Mezzanine Support for 4" Dia. Pipes BY DAA DATE 10-10-01
CCN CHILLED WATER SYSTEM OPTIMIZATION MASTER PLAN
#100256

This detail replaces the original detail (see sheet 17) based upon a 2nd site visit on 10-4-01.

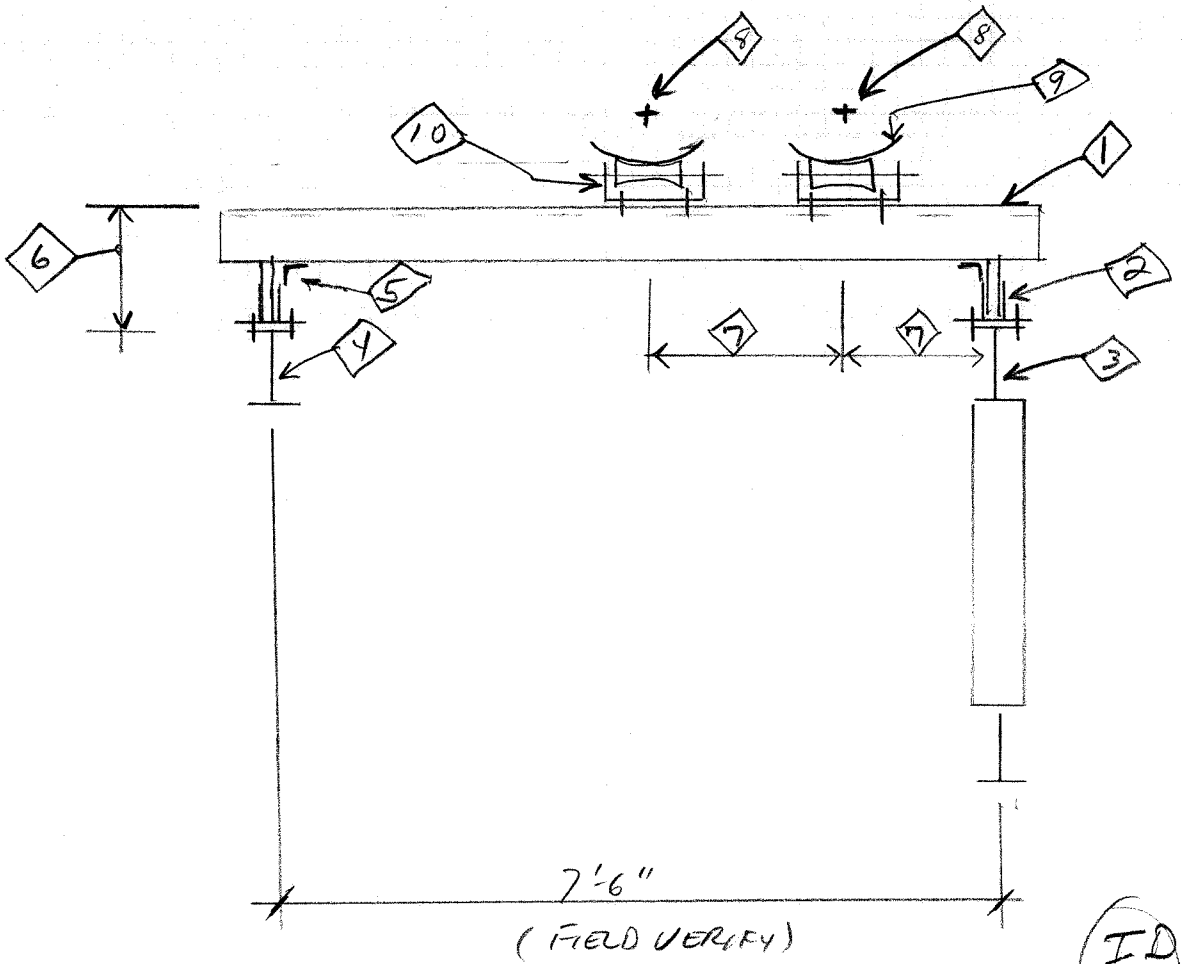

ID #A

6 on M16

MEZZANINE SUPPORT FOR 4" Ø PIPES

1. P5000 UNISTRUT (OR APPROVED EQUAL)
2. POST BASE P2072A UNISTRUT (OR APPROVED EQUAL), TYPICAL. ANCHOR TO SUPPORT MEMBER PER MANUFACTURERS RECOMMENDATIONS.
3. BT-4 TRUSS, EXISTING. DRYWALL COVERING MEMBER, NOT SHOWN.
4. W 8X28 MEZZANINE FRAMING MEMBER. DRYWALL COVERING MEMBER NOT SHOWN.
5. P1000 UNISTRUT POST AND P1325 90° FITTING, TYPICAL.
6. ADJUST LENGTH OF P1000 UNISTRUT POST TO PROVIDE 12 inches for this dimension.

FORM 8X8

CHECKED _____ DATE 10/15/01

APPROVED _____ DATE 10/15/01

Holmes & Narver
ARCHITECTS - ENGINEERS
6501 Americas Parkway NE Suite 700
Albuquerque, NM 87110

JOB NO. 034103442.0053
3442.053.SCAL.004 REV. A
SHEET 8 OF 32

TITLE LOCC - Mezzanine Support for 4" DIA. PIPES BY DAA DATE 10-10-01
CCN CHILLED WATER SYSTEM OPTIMIZATION MASTER PLAN

#100256

7. FIELD VERIFY. COORDINATE WITH MECHANICAL PLANS.

8. 4" DIA. SCH. 40 STEEL PIPE & INSULATION. SEE MECHANICAL SHEETS FOR ADDITIONAL INFORMATION.

9. INSULATION PROTECTION SADDLE, TYPICAL.

10. PIPE ROLL STAND, SIZE AND ATTACH FOR MANUFACTURERS RECOMMENDATIONS. GRINNELL fig. 271 or approved equal.

FORM 8X8

CHECKED _____ DATE 10/15/01

APPROVED _____ DATE 10/15/01

Holmes & Narver
ARCHITECTS - ENGINEERS
6501 Americas Parkway NE Suite 700
Albuquerque, NM 87110

JOB NO. 034 103442.0053
3442.053.SCAL.004 REV.A

SHEET 9 OF 32

TITLE LDCC Mezzanine Support for 4" DIA. PIPES BY DAA DATE 10-10-01
CNN CHILLED WATER SYSTEM OPTIMIZATION MASTER PLAN
#100256

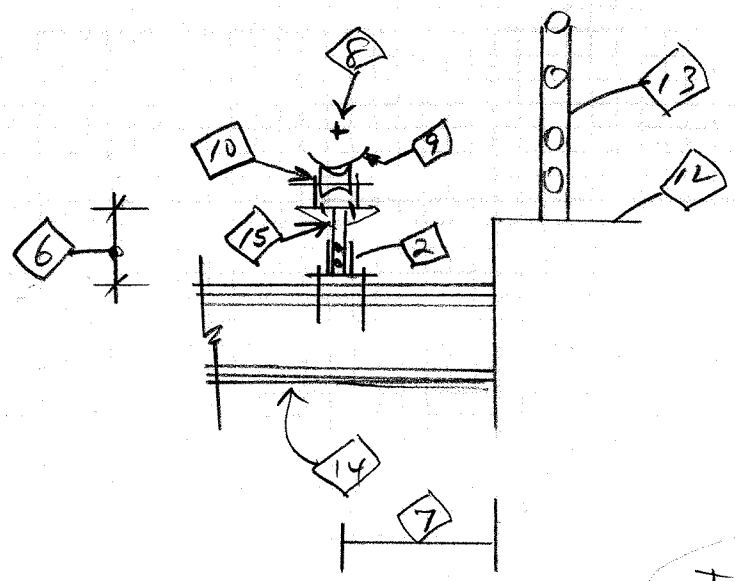

ID # B

1 on M16

NOTES 1-10 same as ID #A (Share notes)

14. EXISTING DRYWALL COVERED FRAMING MEMBER

15. UNISTRUT P1000 POST AND UNISTRUT P2348 WING SHAPE FITTING, OR APPROVED EQUAL.

ID # C

8
9
10
15
2

Show 2 sets

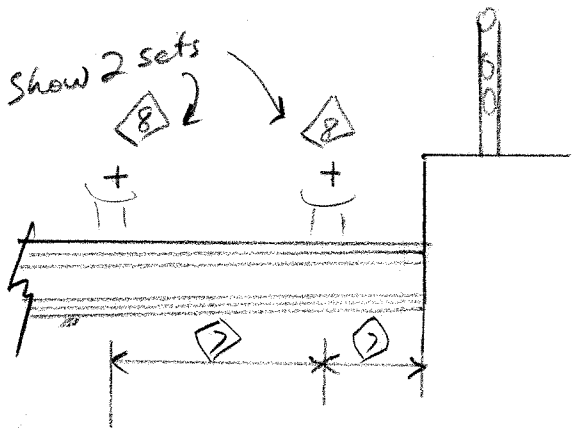

2 on M16

SAME AS #B except TWO sets for 2 4"Ø PIPES.

FORM 8X8

CHECKED _____ DATE 10/15/01

APPROVED _____ DATE 10/15/01

Holmes & Narver
ARCHITECTS - ENGINEERS
6501 Americas Parkway NE Suite 700
Albuquerque, NM 87110

JOB NO. 03410 3442.0053
3442.053.SEAL.004

SHEET 10 OF 32 REV. A.

TITLE LDCC Mezzanine Support for 4" Dia. Pipes BY DAA DATE 10-10-01
CNN CHILLED WATER SYSTEM OPTIMIZATION MASTER PLAN

#100258

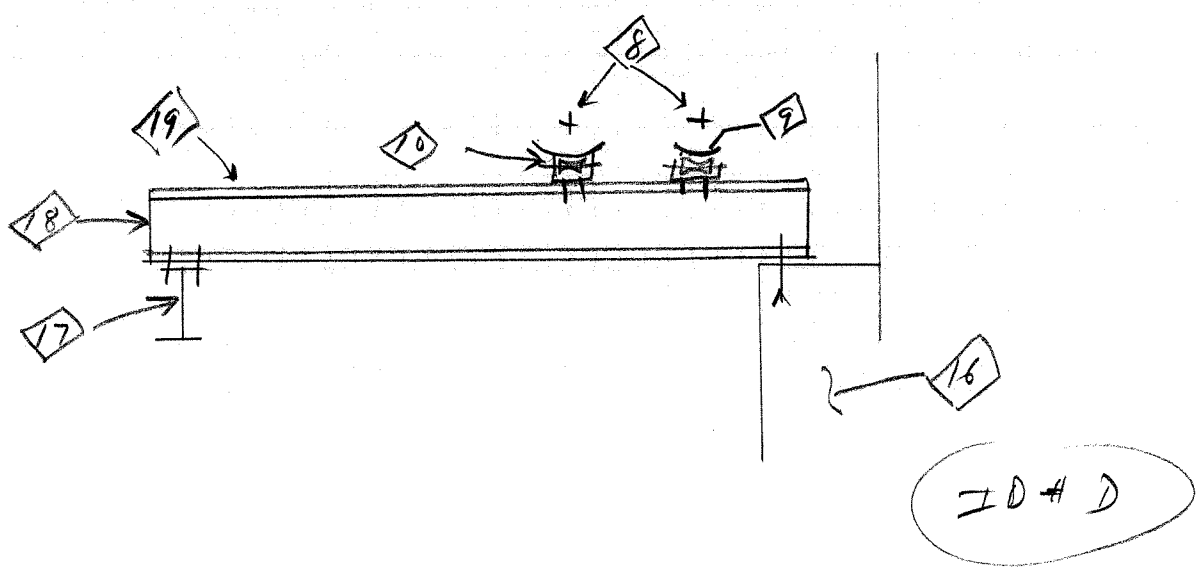

16. FRAMING MEMBER ALONG NORTH WALL OF LDCC, EXISTING.
17. EXISTING CHORD BRACING, FRAMING MEMBER.
18. EXISTING BACK-TO-BACK Channel MEMBERS
19. EXISTING PIPING, VARIES.

FORM 8X8

CHECKED _____ DATE 10/15/01

APPROVED _____ DATE 10/15/01

Holmes & Narver
ARCHITECTS - ENGINEERS
6501 Americas Parkway NE Suite 700
Albuquerque, NM 87110

JOB NO. 03403442.0053
3442.053-SCAL.004 REV. A

SHEET 11 OF 32

TITLE LDCC - Mezzanine Support for 4" Dia. Pipes BY DAA DATE 10-10-01
CCN CHILLED WATER SYSTEM OPTIMIZATION MASTER PLAN

#100256

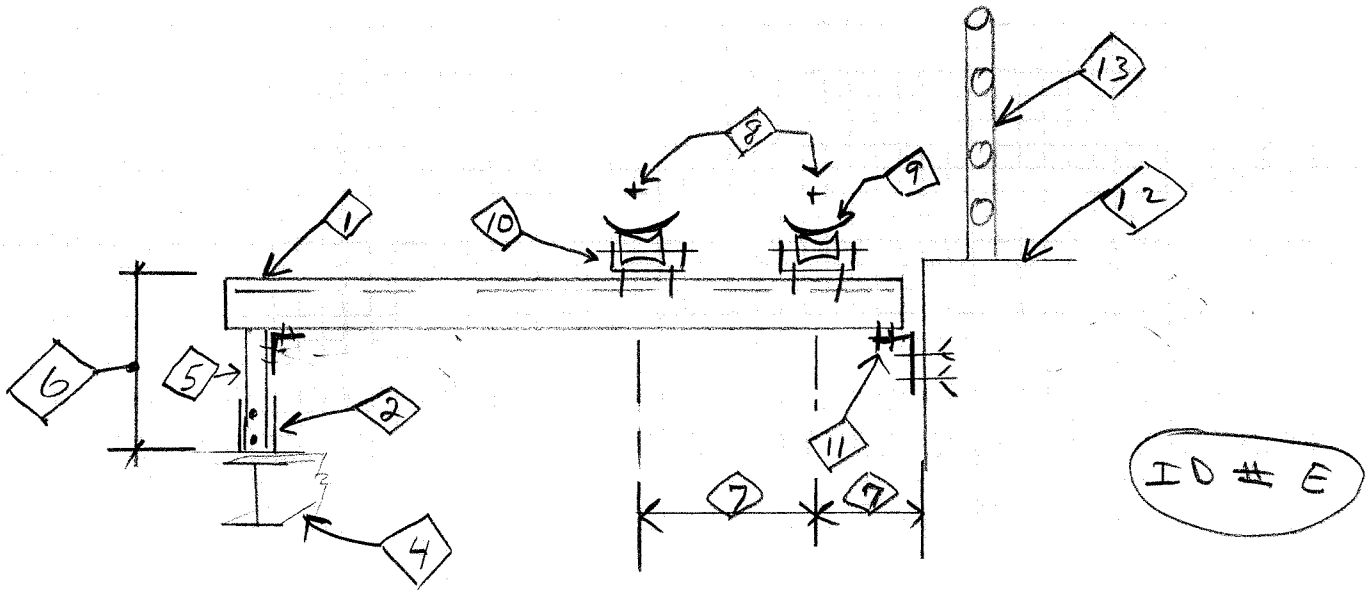

Mezz. details

NOTES SAME AS FOR ID#A PLUS THESE (⇒ Share these notes)
1-10 ↗

11. UNISTRUT P1325 90° FITTING SECURED WITH 2 HILTI HSL M 12/50 HEAVY DUTY EXPANSION ANCHORS (ITEM NO. 00066593). FIELD VERIFY AND NOTIFY PROJECT ENGINEER OR PROJECT MANAGER IF CONDITION VARIES.

12. 2ND FLOOR - CONCRETE.

13. RAILING, EXISTING.

FORM 8X8

CHECKED _____ DATE 10/15/01

APPROVED _____ DATE 10/15/01

Holmes & Narver
ARCHITECTS - ENGINEERS
6501 Americas Parkway NE Suite 700
Albuquerque, NM 87110

JOB NO. 03410344 2.0053
3442.053.SCAL.004 REV. A
SHEET 12 OF 32

TITLE LDCC MEZZANINE SUPPORT FOR 4" DIA. PIPES BY DAA DATE 10-10-01
CCN CHILLED WATER SYSTEM OPTIMIZATION MASTER PLAN
#100256

For sheet M8, Locations ① - ⑨ are identified. The following table identifies the pipe support to be used.

As shown in calcs

Per M8 Location	# of 4"Ø Pipes	ID of detail	Description
1	1	B	Support from existing member
2	2	E	" " " "
3	2	A	" " new framing member
4	2	C	Support from existing member
5	2	D	" " " "
6	2	C	" " " "
7	2	D	" " " "
⊛ 8	2	F	Support from existing outdoor pipe bridge
⊛ 9	2	F	" " " " " "

⊛ these locations are outside LDCC.
SEE 3442.053.SCAL.008 FOR DETAILS.

FORM 8X8

Holmes & Narver
Architects – Engineers
6501 Americas Parkway NE Suite 700
Albuquerque, NM 87110

CHECKED DATE 10/15/01 JOB NO. 3442.053.SCAL.004
Rev. A

APPROVED DATE 10/15/01 SHEET 1 OF 20

BY DAA DATE 10-15-01

TITLE LDCC Mezzanine Support for 4" Dia. Pipes
#100256 CHILLED WATER SYSTEM OPTIMIZATION MASTER PLAN

APPENDIX

Lab Job 7050-3, Eng-C-45225, LDCC Second Level Framing Sheet S4	1 page
Drawing No. C52952, Sheet M8	1 page
Drawing No. C52952, Sheet M15	1 page
Drawing No. C52952, Sheet M16	1 page
Victalic Pipe and Fitting Data Sheets	4 pages
Grinnell Pipe Hangers	4 pages
Unistrut Catalog No. 10R	7 pages

14

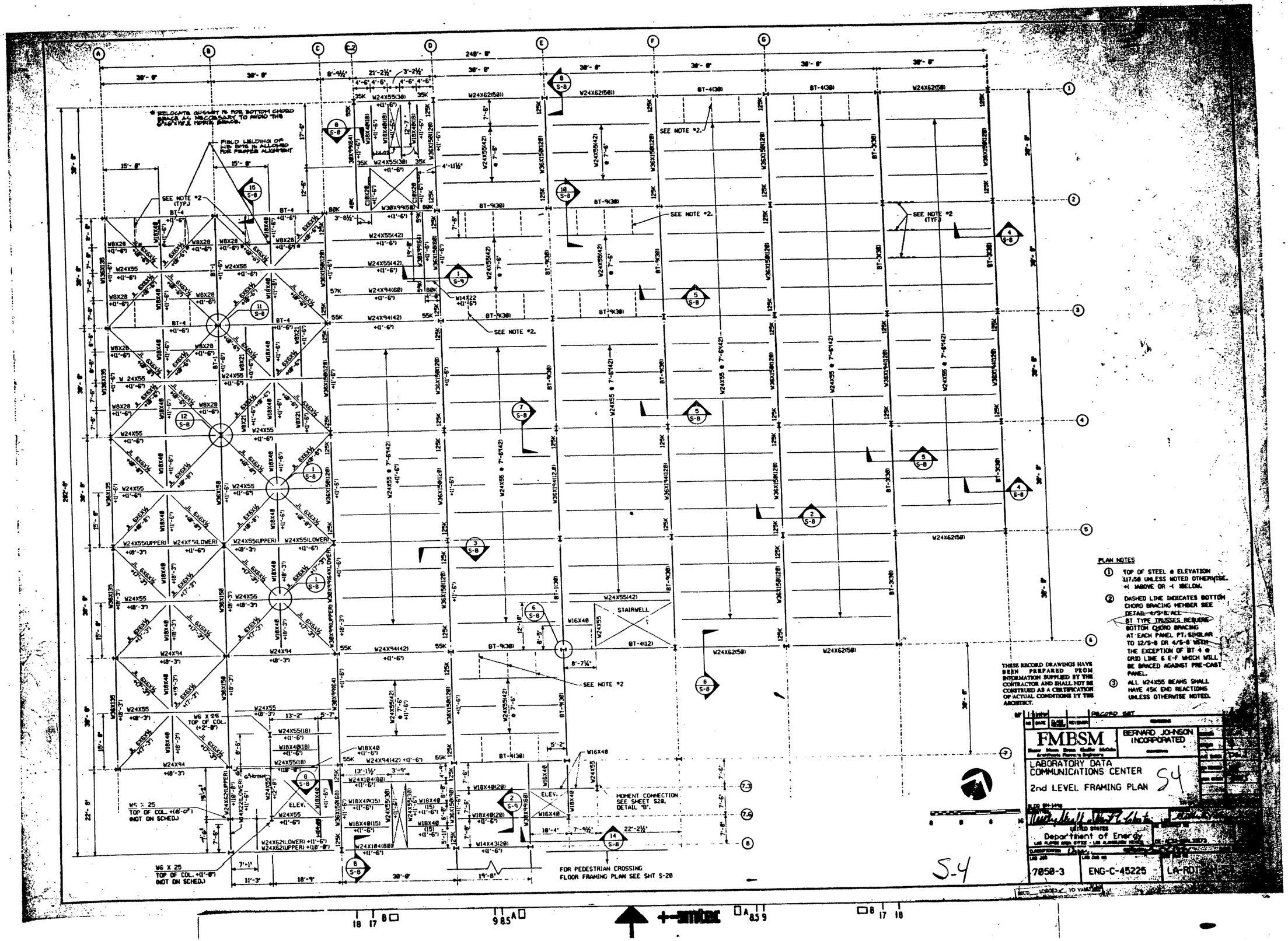
PLAN NOTES
① TOP OF STEEL @ ELEVATION 117.50 UNLESS NOTED OTHERWISE. +(ABOVE OR -(BELOW.
② DASHED LINE INDICATES BOTTOM CHORD BRACING MEMBER SEE DETAIL 4/S-8; AC:
BT TYPE TRUSSES REQUIRE BOTTOM CHORD BRACING AT EACH PANEL PT. SIMILAR TO 12/S-8 OR 4/S-8 WITH THE EXCEPTION OF BT 4 @ GRID LINE 6 E-F WHICH WILL BE BRACED AGAINST PRE-CAST PANEL.
③ ALL W24X55 BEAMS SHALL HAVE 45K END REACTIONS UNLESS OTHERWISE NOTED.
THESE RECORD DRAWINGS HAVE BEEN PREPARED FROM INFORMATION SUPPLIED BY THE CONTRACTOR AND SHALL NOT BE CONSTRUED AS A CERTIFICATION OF ACTUAL CONDITIONS BY THE ARCHITECT.
FMBSM
BERNARD JOHNSON INCORPORATED
LABORATORY DATA COMMUNICATIONS CENTER
2nd LEVEL FRAMING PLAN
S4
UNITED STATES Department of Energy
7050-3
ENG-C-45225
LA-RD
RECORD SHT
SEE NOTE *2.
SEE NOTE *2 (TYP.)
SEE NOTE *2
STAIRWELL
MOMENT CONNECTION SEE SHEET S20, DETAIL "B".
FOR PEDESTRIAN CROSSING FLOOR FRAMING PLAN SEE SHT S-20
FIELD WELDING OF TIE BARS IS ALLOWED FOR PROPER ALIGNMENT
* RELOCATE GUSSET IN ROE BOTTOM CHORD BRACE AS NECESSARY TO AVOID THIS ELEVATED HORIZ BRACE.
S-4

15

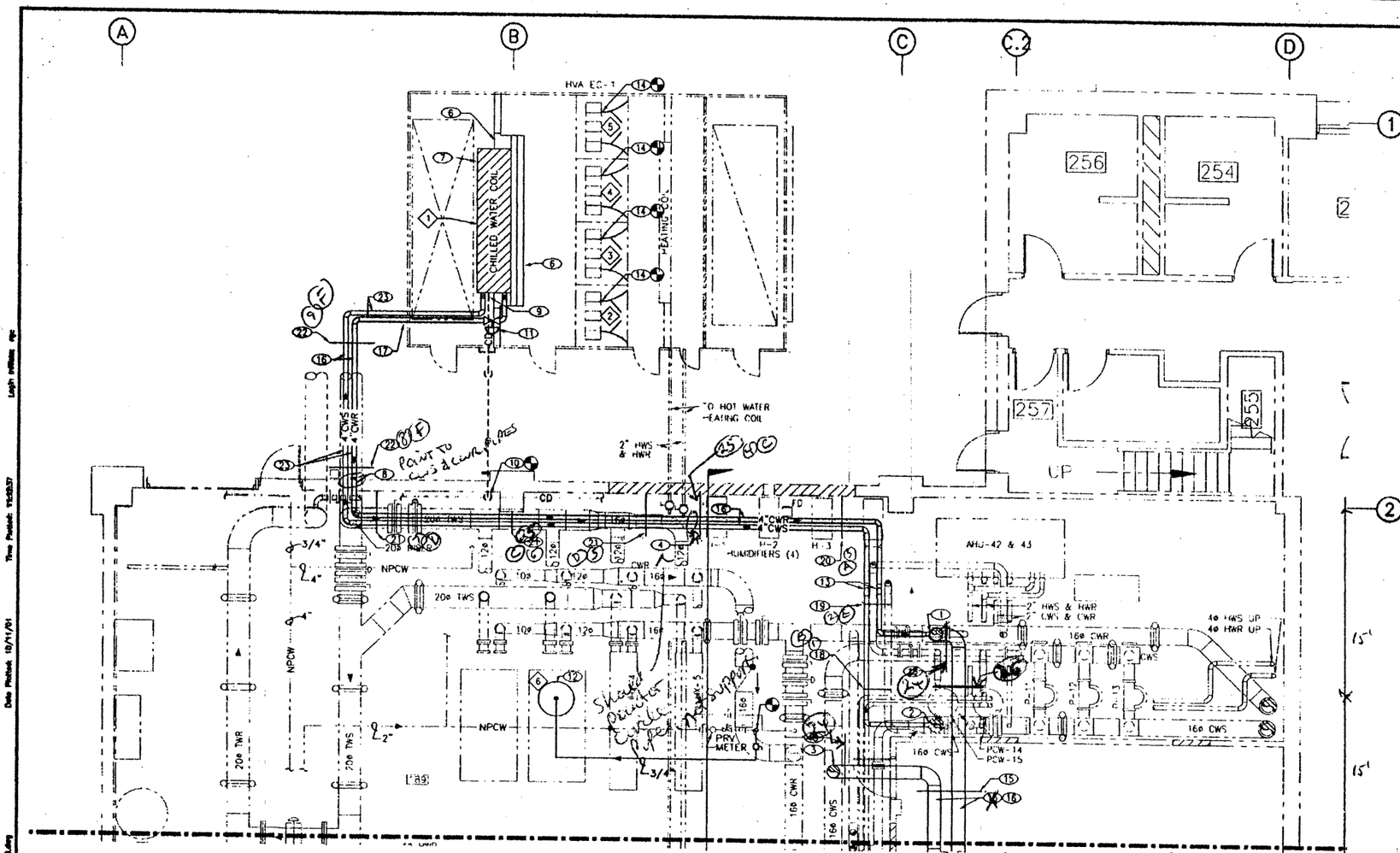

CHILLED WATER PIPING AND HVAC PLAN – AREA A
SCALE: 1/4"=1'-0"

KEYED NOTES

1. SEE DETAIL 3/M17 FOR CWR CONNECTION DETAIL.
2. SEE DETAIL 4/M17 FOR CWS CONNECTION DETAIL.
3. HOT TAP THE CWS WITH A 12"ø. INSTALL A 12"ø VALVE AND EXTEND CWS PIPING AS SHOWN. SEE DETAIL 5/M17
4. ROUTE CWS AND CWR PIPING UP ON TOP OF STRUCTURE MEZZANINE FRANKLIN
   SEE DETAIL 2/M16.
5. NOT USED
6. INSTALL 14GA. SHEET METAL BLANK DOWN STREAM OF INACTIVE PORTION OF COIL FACE DAMPERS.
7. INSTALL CHILLED WATER COILAND COIL CASING. SEE DETAIL 1/M17 AND 2/M17 FOR PROCEDURE.
8. CORE DRILL AND SLEEVE 4"ø CHILLED WATER SUPPLY AND RETURN PIPING THROUGH WALL. SEAL OPENING WITH LINK SEAL OR EQUIVALENT. INSTALL ESCUTIONS ON BOTH SIDES OF WALL FOR EACH PIPE.
9. ROUTE 1-1/2" CONDENSATE DRAIN FROM COIL DRAIN PAN SUMP PUMP UP TO BOTTOM OF PIPE 10'-0".
10. ROUTE CONDENSATE DRAIN UP 85" ABOVE GRADE. SLOPE DRAIN PIPE TOWARD BUILDING. SLEEVE PIPE THROUGH WALL. SEAL WALL PENETRATION WITH LINK SEAL. DROP CONDENSATE DRAIN PIPING DOWN AND CONNECT TO EXISTING 1-1/2"ø DRAIN PIPE.
11. INSTALL MODULATING TWO WAY CONTROL VALVE. SEE CONTROL DRAWINGS.
12. INSTALL CHILLED WATER EXPANSION TANK ON EXISTING CONCRETE PAD AND ANCHOR IN PLACE. SET PRESSURE AT 25 PSIG.
13. DROP PIPE DOWN TO WITHIN 12" OF TOP OF MEZZANINE LATTICE.
14. INSTALL NEW INLET CONE WITH INLET VANE DAMPERS. INSTALL IN ACCORDANCE WITH THE MANUFACTURERS INSTRUCTIONS. FURNISH AND INSTALL PNEUMATIC ADAPTER WITH EACH DAMPER.
15. SEE STRUCTURAL DETAIL 4/M15 FOR PIPE SUPPORT AND SEISMIC RESTRAINT REQUIREMENTS.

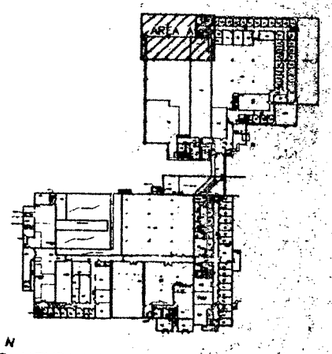

KEYPLAN
SCALE: NONE

NOT FOR CONSTRUCTION

KEYED NOTES (CONT.)

16. INSULATE PIPING. SEE SPECIFICATIONS.
17. SUPPORT PIPING AT WALL OF UNIT EC-1 USING P-1000 UNISTRUT AND CLAMPS. SEAL PIPE PENETRATIONS WITH EXTERIOR TYPE CAULKING.
18. SUPPORT PIPING ~~AT WALL~~. SEE STRUCTURAL DETAIL 1/M16 (B) FROM EXISTING STRUCTURE
19. SUPPORT PIPING ~~AT WALL~~. SEE STRUCTURAL DETAIL 4/M16 (E) FROM EXISTING STRUCTURE
20. SUPPORT PIPING ~~AT WALL~~. SEE STRUCTURAL DETAIL 2/M15 (A) BACK AS IT WAS
21. SUPPORT PIPING ~~AT WALL~~. SEE STRUCTURAL DETAIL 3/M16 (D)
22. SUPPORT PIPING ~~AT WALL~~. SEE STRUCTURAL DETAIL 5/M16 (F) FROM EXISTING PIPE BRIDGE STRUCTURE
23. INSTALL HEAT CABLE ON EXTERIOR CWR AND CWS CHILLED WATER PIPING. COORDINATE WITH DIVISION 16.

0' 1' 2' 4' 6' 8'
1/4"=1'-0"

24. SEE STRUCTURAL DETAIL 5/M15 FOR PIPE SUPPORT AND SEISMIC RESTRAINT REQUIREMENTS
25. SUPPORT PIPING FROM EXISTING STRUCTURE. SEE STRUCTURAL DETAIL 2/M16 (C)
26. SEE NOTE 15 except provide one 1" pipe and stand for 1.12" DIA PIPE.

ENGINEER'S SEAL

B	10/5/01		90% "IN-HOUSE REVIEW"	RC	NS	DO		
A	9/18/01		60% "IN-HOUSE REVIEW"	RC	NS	DO		
NO.	DATE	CLASS REV.	REVISIONS	DRN	DES	CHKD	SUP	APP

HOLMES & NARVER/RAYTHEON (HNR)
HOLMES & NARVER/RAYTHEON ENGINEERS & CONSTRUCTORS
CHAVEZ-GRIEVES CONSULTING ENGINEERS
BRIDGERS & PAXTON CONSULTING ENGINEERS

CCN CHILLED WATER SYSTEM OPTIMIZATION MASTER PLAN
MECH: CHILLED WATER PIPING AND HVAC PLAN – AREA A

BLDG. 1498 & 132 TA-3

DRAWN R. CORTEZ
DESIGN N. GUNN
CHKD R. BURNETT
DATE 10/4/01

SUBMITTED DWIGHT DORSEY
APPROVED FOR RELEASE DOUG NEEDLE

Los Alamos
Los Alamos National Laboratory
Los Alamos, New Mexico, USA

SHEET M8 OF

CLASSIFICATION
SIGNATURE
PROJECT ID 100256
DRAWING NO. C52952
REV. B

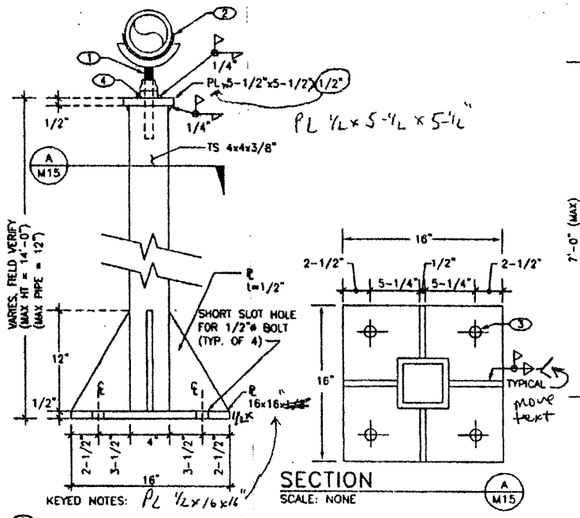

KEYED NOTES:

1. ADJUSTABLE PIPE SADDLE SUPPORT (FIG. 264, GRINNELL CATALOG PH-99). SIZE PER PIPE DIAMETER AND INSULATION THICKNESS, SPECIFIED ELSEWHERE.
2. INSULATION SHIELD. SIZE PER PIPE DIAMETER AND INSULATION THICKNESS SPECIFIED ELSEWHERE.
3. MOUNT USING HILTI HSL M 12/50 HEAVY-DUTY EXPANSION ANCHOR (ITEM NO. 00066593, HILTI 2001 CATALOG). INSTALL PER MANUFACTURERS RECOMMENDATIONS.
4. DRILL HOLE IN CENTER OF PLATE TO ALLOW VERTICAL SUPPORT MOVEMENT.

PIPE SUPPORT – FLOOR MOUNTED

SCALE: NONE

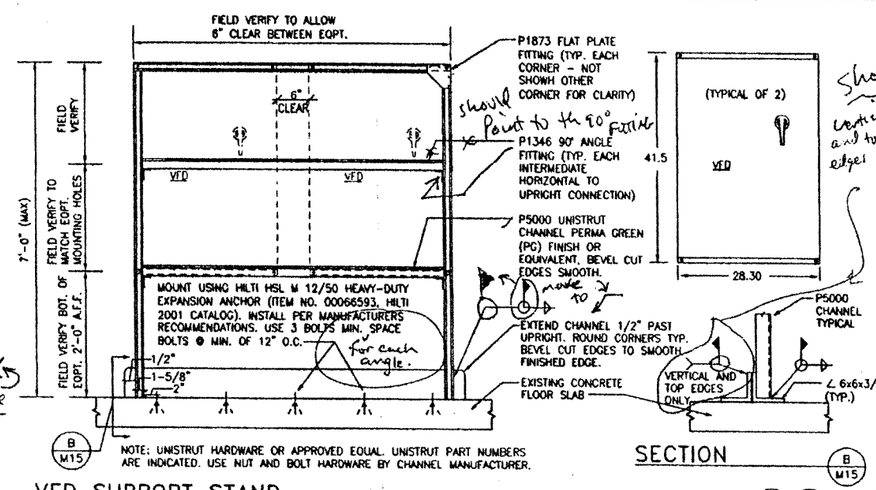

NOTE: UNISTRUT HARDWARE OR APPROVED EQUAL. UNISTRUT PART NUMBERS ARE INDICATED. USE NUT AND BOLT HARDWARE BY CHANNEL MANUFACTURER.

VFD SUPPORT STAND

SCALE: NONE

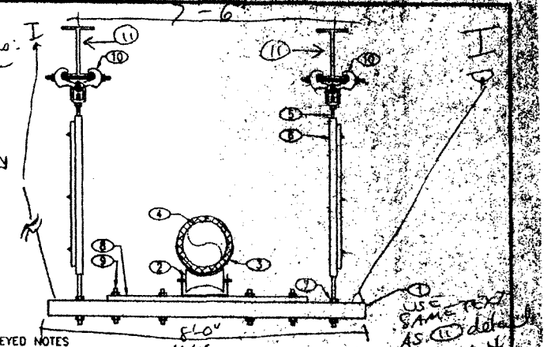

PIPE HANGER SUPPORT

SCALE: NONE

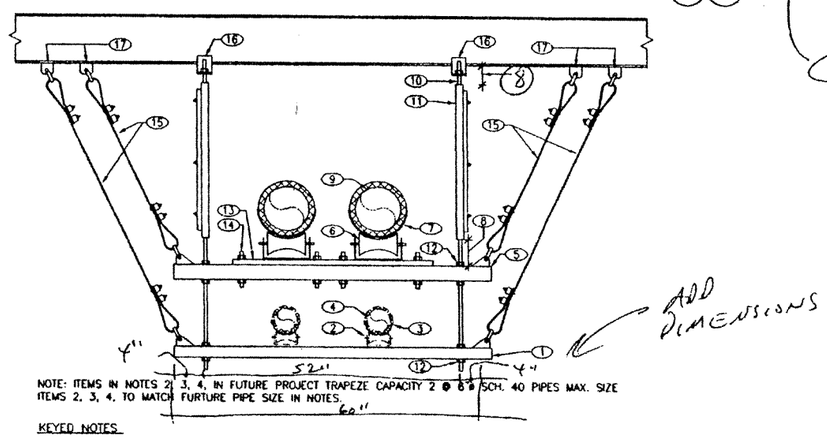

NOTE: ITEMS IN NOTES 2, 3, 4, IN FUTURE PROJECT TRAPEZE CAPACITY 2 @ 6"ø SCH. 40 PIPES MAX. SIZE ITEMS 2, 3, 4, TO MATCH FURTURE PIPE SIZE IN NOTES.

KEYED NOTES

1. P5000 UNISTRUT CHANNEL PERMA GREEN (PG) FINISH OR EQUIVALENT, BEVEL CUT EDGES SMOOTH.
2. 16" PIPE ROLL STAND. SEE GRINNELL FIG. 271, (OR APPROVED EQUAL) ATTACH PER MANUFACTURERS RECOMMENDATIONS. N.I.C. (FUTURE)
3. PROTECTION SADDLE N.I.C. (FUTURE)
4. 6"ø SCH 40 STEEL PIPE WITH 1-1/2" INSULATION. SEE SPECIFICATIONS. N.I.C. (FUTURE)
5. TS 4x4x3/8", BEVEL CUT EDGES SMOOTH.
6. 16" PIPE ROLL STAND. SEE GRINNELL FIG. 271 (OR APPROVED EQUAL). ATTACH PER MANUFACTURERS RECOMMENDATIONS.
7. 16" INSULATION PROTECTION SADDLE.
8. 6" MAXIMUM, TYPICAL
9. 12"ø SCH 40 STEEL PIPE WITH 1-1/2" INSULATION. SEE SPECIFICATIONS.
7. 16" INSULATION PROTECTION SADDLE.
8. 6" MAXIMUM
9. 12"ø SCH 40 STEEL PIPE WITH 1-1/2" INSULATION. SEE SPECIFICATIONS.
10. 7/8"ø ASTM A36 ALL THREADED ROD.
11. ROD STIFFNER FOR 7/8"ø ROD. SECURE WITH 2 BOLTS MIN., 12" O.C. MAX. (TOLCO FIG. 98 OR APPROVED EQUAL).
12. WASHER, NUT, TYPICAL EACH END EACH SIDE OF HORIZONTAL MEMBER.
13. P1000 (UNISTRUT OR APPROVED EQUAL)
14. 1/2"ø BOLT, NUT, LOCK WASHER, TYP. OF 4
15. CABLE SWAY BRACE ASSEMBLY. USE 1/4" DIA. GALVANIZED 7x19 CORE STRAND AIRCRAFT CABLE. USE CLAMPS TO FULLY DEVELOP CABLE STRENGTH. ATTACH TO TRAPEZE WITH TOLCO FIG. 982. CABLE SWAY BRACE ATTACHMENT, OR APPROVED EQUAL. THRU BOLT TO TRAPEEZE AND MECHANICALLY ATTACH TO 7/8"ø ROD USING A 1/4" THICK PLATE.
16. BEAM CLAMP, GRINNELL FIG. 292 OR APPROVED EQUAL. VERIFY SIZE OF SUPPORT BEAM FLANGE.
17. USE WELDING LUG, TOLCO FIG. 343 OR APPROVED EQUAL. CONNECT SWAY BRACE ATTACHMENT WITH 3/4" DIA. BOLT, WASHER, DOUBLE NUT.

PIPE HANGER – DOUBLE TRAPEZE

SCALE: NONE

ADD SWAY BRACING to DETAIL 5 USE (4/MP) components & call outs w/correct keynote #'s.

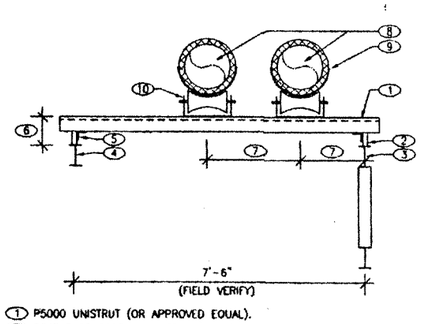

1. P5000 UNISTRUT (OR APPROVED EQUAL).
2. POST BASE P2072A UNISTRUT (OR APPROVED EQUAL), TYPICAL. ANCHOR TO SUPPORT MEMBER PER MANUFACTURERS RECOMMENDATIONS.
3. BT-4 TRUSS EXISTING. DRYWALL COVERING MEMBER, NOT SHOWN.
4. W 8x28 MEZZANINE FRAMING MEMBER. DRYWALL COVERING MEMBER, NOT SHOWN.
5. P1000 UNISTRUT POST AND P1325 90° FITTING, TYPICAL
6. ADJUST LENGTH OF P1000 UNISTRUT POST TO PROVIDE 12 INCHES FOR THIS DIMENSION.
7. FIELD VERIFY.
8. 4" DIA. SCH. 40 STEEL PIPE AND INSULATION.
9. INSULATION PROTECTION SADDLE TYPICAL.
10. PIPE ROLL STAND, GRINNELL FIG. 271 OR APPROVAL EQUAL.

SIZE AND MOUNT PER MANUFACTURERS RECOMMENDATIONS. FOR 2-4" DIA. PIPES

PIPE SUPPORT

SCALE: NONE

NOT FOR CONSTRUCTION

REV	DATE	CLASS REV	REVISIONS	DRN	DES	CHKD	APP	DATE
B	10/5/01		90% "IN-HOUSE REVIEW"	RC	MS	BD		
A	9/18/01		60% "IN-HOUSE REVIEW"	RC	MS	BD		

HOLMES & NARVER/RAYTHEON (HNR)

HOLMES & NARVER/RAYTHEON INFRASTRUCTURE & CONSTRUCTION
CHAVEZ-GRIEVES CONSULTING ENGINEERS
MCKISSEE & PARTNER CONSULTING ENGINEERS

CCN CHILLED WATER SYSTEM OPTIMIZATION MASTER PLAN

MECH: DETAILS.

BLDG. 1498 & 132 TA-3

DRAWN R. CORREY
DESIGN M. SLAVEN
CHECKED D. DORSEY
DATE 10/5/01

SUBMITTED DWIGHT DORSEY
APPROVED FOR RELEASE BOBBY HEFELE

Los Alamos — Los Alamos National Laboratory, Los Alamos, New Mexico 87545

SHEET M15 OF

CLASSIFIER REVIEWER DATE

PROJECT ID 100256 DRAWING NO. C52952 REV. B

ENGINEER'S SEAL

Cad File Name: H:\B2002.DT\cad\hvac\A
Cad File Path: 00018.dwg
Date Plotted: 10/11/01
Time Plotted: 09:18:52
Login Initials: rgc

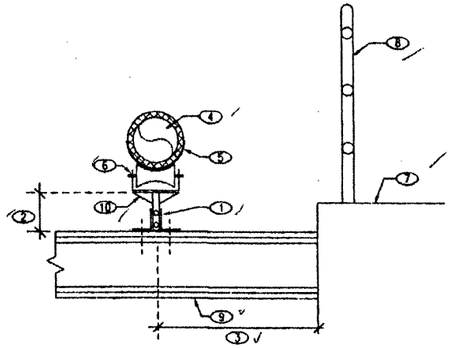

1. POST BASE P2072A UNISTRUT (OR APPROVED EQUAL), TYPICAL. ANCHOR TO SUPPORT MEMBER PER MANUFACTURERS RECOMMENDATIONS.
2. ADJUST LENGTH OF P1000 UNISTRUT POST TO PROVIDE 12 INCHES FOR THIS DIMENSION.
3. FIELD VERIFY.
4. 4" DIA. SCH. 40 STEEL PIPE AND INSULATION.
5. INSULATION PROTECTION SADDLE TYPICAL.
6. PIPE ROLL STAND, GRINNELL FIG. 271 OR APPROVAL EQUAL.
7. 2ND FLOOR CONCRETE.
8. EXISTING RAILING.
9. EXISTING DRYWALL COVERED FRAMMING MEMBER.
10. UNISTRUT P1000 POST AND UNISTRUT P2348 WING SHAPE FITTING, OR APPROVED EQUAL.

PIPE SUPPORT FOR ~~SINGLE~~ ONE 4" DIAMETER PIPE

SCALE: NONE

1/M8 (B)

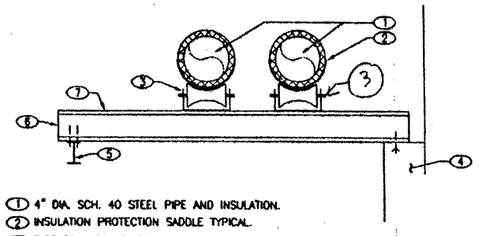

1. 4" DIA. SCH. 40 STEEL PIPE AND INSULATION.
2. INSULATION PROTECTION SADDLE TYPICAL.
3. PIPE ROLL STAND, GRINNELL FIG. 271 OR APPROVAL EQUAL.
4. EXISTING FRAMING MEMBER ALONG NORTH WALL OF LDCC.
5. EXISTING CHORD BRACING, ~~FRAMING~~ MEMBERS. FIELD VERIFY ANCHORING ~~METHOD~~ METHOD & VERIFY WITH PROJECT ENGINEER.
6. EXISTING BACK-TO-BACK CHANNEL MEMBERS.
7. EXISTING PIPING, VARIES

MOUNTED TO CHANNEL MEMBERS

FRAMING

PIPE SUPPORT - 4" DIAMETER PIPES.

SCALE: NONE

3/M8 (D)

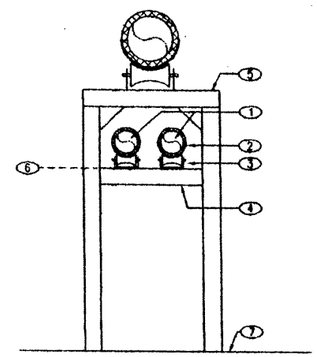

1. 4" DIA. SCH. 40 STEEL PIPE AND INSULATION.
2. INSULATION PROTECTION SADDLE, TYPICAL.
3. PIPE ROLL STAND, GRINNELL FIG. 271 OR APPROVAL EQUAL, TYPICAL.
4. FIELD ~~VERIFY~~ WELD TS 4x4x3/8" HORIZONTAL MEMBER TO EXISTING PIPE BRIDGE SUPPORT STRUCTURE.
5. EXISTING PIPE BRIDGE SUPPORT STRUCTURE,
6. ELEVATION TO MATCH ELEVATION OF LDCC WALL PENETRATION OR EC-1 WALL PENETRATION.
7. CONCRETE SIDEWALK OR STRUCTURE SUPPORT FOUNDATION.

PIPE SUPPORT

SCALE: NONE

5/M8 (F)

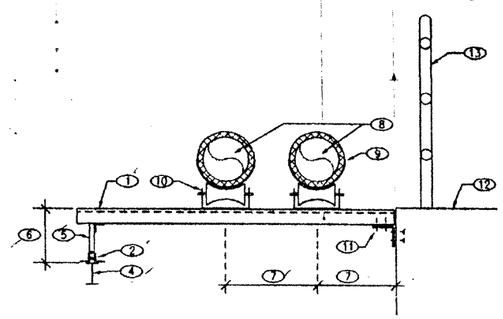

1. P5000 UNISTRUT (OR APPROVED EQUAL).
2. POST BASE P2072A UNISTRUT (OR APPROVED EQUAL), TYPICAL. ANCHOR TO SUPPORT MEMBER PER MANUFACTURERS RECOMMENDATIONS.
3. ~~BT-4 TRUSS EXISTING DRYWALL COVERING MEMBER, NOT SHOWN.~~ USED.
4. W 8x28 MEZZANINE FRAMING MEMBER. DRYWALL COVERING MEMBER, NOT SHOWN.
5. P1000 UNISTRUT POST AND P1325 90° FITTING. TYPICAL
6. ADJUST LENGTH OF P1000 UNISTRUT POST TO PROVIDE 12 INCHES FOR THIS DIMENSION.
7. FIELD VERIFY.
8. 4" DIA. SCH. 40 STEEL PIPE AND INSULATION.
9. INSULATION PROTECTION SADDLE, TYPICAL.
10. PIPE ROLL STAND, GRINNELL FIG. 271 OR APPROVAL EQUAL.
11. UNISTRUT P1225 90° FITTING SECURED WITH 2 HILTI HSL M 12/50 HEAVY DUTY EXPANSION ANCHORS (ITEM NO. 00066593) AND 2-1/2" DIA. BOLTS. FIELD VERIFY AND NOTIFY PROJECT ENGINEER OR PROJECT MANAGER IF CONDITION VARIES.
12. 2ND FLOOR - CONCRETE.
13. EXISTING RAILING.

PIPE SUPPORT

SCALE: NONE

4/M8 (E)

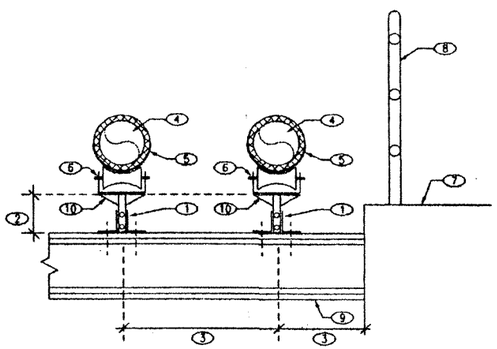

1. POST BASE P2072A UNISTRUT (OR APPROVED EQUAL), TYPICAL. ANCHOR TO SUPPORT MEMBER PER MANUFACTURERS RECOMMENDATIONS.
2. ADJUST LENGTH OF P1000 UNISTRUT POST TO PROVIDE 12 INCHES FOR THIS DIMENSION.
3. FIELD VERIFY.
4. 4" DIA. SCH. 40 STEEL PIPE AND INSULATION.
5. INSULATION PROTECTION SADDLE TYPICAL.
6. PIPE ROLL STAND, GRINNELL FIG. 271 OR APPROVAL EQUAL.
7. 2ND FLOOR CONCRETE.
8. EXISTING RAILING.
9. EXISTING DRYWALL COVERED FRAMMING MEMBER.
10. UNISTRUT P1000 POST AND UNISTRUT P2348 WING SHAPE FITTING, OR APPROVED EQUAL.

PIPE SUPPORT FOR ~~DOUBLE~~ TWO 4" DIAMETER PIPES

SCALE: NONE

2/M8 (C)

~~PIPE SUPPORT~~

~~SCALE: NONE~~

~~6/M8~~

NOT FOR CONSTRUCTION

NO.	DATE	CLASS. NO.	REVISION	DRN	DES	CHKD	CLR	APP
B	10/5/01		90% "IN-HOUSE REVIEW"	RC	MS	DD		
A	9/18/01		60% "IN-HOUSE REVIEW"	RC	MS	DD		

HOLMES & NARVER/RAYTHEON (HNR)

HOLMES & NARVER/RAYTHEON ENGINEERS & CONSTRUCTORS
CRAVEN-GREEVES CONSULTING ENGINEERS
BUDGEON & PARKER CONSULTING ENGINEERS

CCN CHILLED WATER SYSTEM OPTIMIZATION MASTER PLAN

MECH: DETAILS

BLDG. 1498 & 132 TA-3

DRAWN: R. CRUZ
REVIEW: M. SCHAFER
CHECKED: M. DORSEY
DATE: 10/5/01

SUBMITTED: DWIGHT DORSEY
APPROVED FOR RELEASE: DOUG HOFFLE

Los Alamos — Los Alamos National Laboratory, Los Alamos, New Mexico 87545

SHEET M16 OF

CLASSIFICATION: ENGINEER:

PROJECT ID: 100256

DRAWING NO.: C52952

REV: B

ENGINEER'S SEAL

Cad File Path: H:\5050\JP\cad\hvac\
Cad File Name: 5050JP16.dwg
Date Plotted: 10/11/01
Time Plotted: 0621:38
Login Initials: rgc

18

Steel Pipe Data

Nom. Size and Pipe O.D., D, in.	Schedule Number or Weight[a]	Wall Thickness, in. t	Inside Diameter in. d	Surface Area Outside ft²/ft	Surface Area Inside ft²/ft	Cross-Sectional Metal Area in²	Cross-Sectional Flow Area in²	Weight of Pipe lb/ft	Weight of Water lb/ft	Mfr. Process	Joint Type	Working Pressure[b] ASTM A53 B to 400 °F psig
1/4	40 ST	0.088	0.364	0.141	0.095	0.125	0.104	0.424	0.045	CW	Thrd	188
D=0.540	80 XS	0.119	0.302	0.141	0.079	0.157	0.072	0.535	0.031	CW	Thrd	871
3/8	40 ST	0.091	0.493	0.177	0.129	0.167	0.191	0.567	0.083	CW	Thrd	209
D=0.675	80 XS	0.126	0.423	0.177	0.111	0.217	0.141	0.738	0.061	CW	Thrd	820
1/2	40 ST	0.109	0.622	0.220	0.163	0.250	0.304	0.850	0.131	CW	Thrd	214
D=0.840	80 XS	0.147	0.546	0.220	0.143	0.320	0.234	1.087	0.101	CW	Thrd	753
3/4	40 ST	0.113	0.824	0.275	0.216	0.333	0.533	1.13	0.231	CW	Thrd	217
D=1.050	80 XS	0.154	0.742	0.275	0.194	0.433	0.432	1.47	0.187	CW	Thrd	681
1	40 ST	0.133	1.049	0.344	0.275	0.494	0.864	1.68	0.374	CW	Thrd	226
D=1.315	80 XS	0.179	0.957	0.344	0.251	0.639	0.719	2.17	0.311	CW	Thrd	642
1 1/4	40 ST	0.140	1.380	0.435	0.361	0.669	1.50	2.27	0.647	CW	Thrd	229
D=1.660	80 XS	0.191	1.278	0.435	0.335	0.881	1.28	2.99	0.555	CW	Thrd	594
1 1/2	40 ST	0.145	1.610	0.497	0.421	0.799	2.04	2.72	0.881	CW	Thrd	231
D=1.900	80 XS	0.200	1.500	0.497	0.393	1.068	1.77	3.63	0.765	CW	Thrd	576
2	40 ST	0.154	2.067	0.623	0.541	1.07	3.36	3.65	1.45	CW	Thrd	230
D=2.375	80 XS	0.218	1.939	0.622	0.508	1.48	2.95	5.02	1.28	CW	Thrd	551
2 1/2	40 ST	0.203	2.469	0.753	0.646	1.70	4.79	5.79	2.07	CW	Weld	539
D=2.875	80 XS	0.276	2.323	0.753	0.608	2.25	4.24	7.66	1.83	CW	Weld	835
3	40 ST	0.216	3.068	0.916	0.803	2.23	7.39	7.57	3.20	CW	Weld	482
D=3.500	80 XS	0.300	2.900	0.916	0.759	3.02	6.60	10.25	2.86	CW	Weld	767
4	40 ST	0.237	4.026	1.178	1.054	3.17	12.73	10.78	5.51	CW	Weld	430
D=4.500	80 XS	0.337	3.826	1.178	1.002	4.41	11.50	14.97	4.98	CW	Weld	695
6	40 ST	0.280	6.065	1.734	1.588	5.58	28.89	18.96	12.50	ERW	Weld	696
D=6.625	80 XS	0.432	5.761	1.734	1.508	8.40	26.07	28.55	11.28	ERW	Weld	1209
8	30	0.277	8.071	2.258	2.113	7.26	51.16	24.68	22.14	ERW	Weld	526
D=8.625	40 ST	0.322	7.981	2.258	2.089	8.40	50.03	28.53	21.65	ERW	Weld	643
	80 XS	0.500	7.625	2.258	1.996	12.76	45.66	43.35	19.76	ERW	Weld	1106
	30	0.307	10.136	2.814	2.654	10.07	80.69	34.21	34.92	ERW	Weld	485
10	40 ST	0.365	10.020	2.814	2.623	11.91	78.85	40.45	34.12	ERW	Weld	606
D=10.75	XS	0.500	9.750	2.814	2.552	16.10	74.66	54.69	32.31	ERW	Weld	887
	80	0.593	9.564	2.814	2.504	18.92	71.84	64.28	31.09	ERW	Weld	1081
	30	0.330	12.090	3.338	3.165	12.88	114.8	43.74	49.68	ERW	Weld	449
12	ST	0.375	12.000	3.338	3.141	14.58	113.1	49.52	48.94	ERW	Weld	528
D=12.75	40	0.406	11.938	3.338	3.125	15.74	111.9	53.48	48.44	ERW	Weld	583
	XS	0.500	11.750	3.338	3.076	19.24	108.4	65.37	46.92	ERW	Weld	748
	80	0.687	11.376	3.338	2.978	26.03	101.6	88.44	43.98	ERW	Weld	1076

[a] Numbers are schedule numbers per ASTM B36.10; ST = Standard Weight; XS = Extra Strong.

[b] Working pressures have been calculated per ASME/ANSI B31.9 using furnace butt weld (continuous weld, CW) pipe through 4 in. and electric resistance weld (ERW) thereafter. The allowance, A, has been taken as:

(a) 12.5% of t for mill tolerance on pipe wall thickness, plus

(b) An arbitrary corrosion allowance of 0.025 in. for pipe sizes through NPS 2 and 0.065 in. from NPS 2½ through 20, plus

(c) A thread cutting allowance for sizes through NPS 2.

Because the pipe wall thickness of threaded standard weight pipe is so small after deducting the allowance, A, the mechanical strength of the pipe is impaired. It is good practice to limit standard weight threaded pipe pressures to 90 psig for steam and 125 psig for water.

LANL
CCF/LDCC Chilled Water
Plant Conversion

rec'd 2-20-01
from David Walker, Brickers & Paxton
ME-

19

RIGID COUPLING
Style 07

PIPE		COUPLING COMPLETE† With "E" or "T" Gasket			SPARE PARTS				
					"E" or "T" Gasket Only	Bolt & Nut			
Nominal Size (Inches)	Outside Diameter	Weight Each (Lbs.)	Price Each Painted	Price Each Galv.	Price Each	Number*	Size (Inches)	Price Each Black	Price Each Plated
1	1.315	1.6	$ 18.55	$ 22.15	$ 6.20	[illegible]	[illegible]	$ 3.35	$ 3.70
1¼	1.660	2.0	18.55	22.15	6.50	[illegible]	[illegible]	3.35	3.70
1½	1.900	1.6	18.55	22.15	9.25	[illegible]	[illegible]	3.35	3.70
2	2.375	2.3	19.00	23.20	9.25	[illegible]	[illegible]	3.55	4.00
2½	2.875	2.8	21.90	27.05	11.25	[illegible]	[illegible]	3.55	4.00
3 O.D.	3.000	3.6	21.90	27.05	11.25	[illegible]	[illegible]	3.55	4.00
3	3.500	3.1	25.65	31.80	12.20	[illegible]	[illegible]	3.55	4.00
4	4.500	4.8	36.30	45.10	15.60	[illegible]	[illegible]	3.55	4.00
4¼	4.250	5.2	35.55	43.90	15.60	[illegible]	[illegible]	—	5.10
5	5.563	7.1	47.15	58.75	20.40	[illegible]	[illegible]	4.50	5.10
5¼ O.D.	5.250	7.4	45.00	56.50	20.40	[illegible]	[illegible]	—	5.85
5½ O.D.	5.500	7.6	47.15	58.75	20.40	[illegible]	[illegible]	—	5.85
6	6.625	8.7	63.05	77.95	22.05	[illegible]	[illegible]	4.50	5.10
6¼ O.D.	6.250	9.2	63.05	77.95	22.05	[illegible]	[illegible]	—	5.85
6½ O.D.	6.500	7.2	63.05	77.95	22.05	[illegible]	[illegible]	4.50	5.10
8	8.625	14.9	99.35	123.50	30.50	[illegible]	[illegible]	5.25	5.85
10	10.750	25.0	152.20	193.70	39.10	[illegible]	[illegible]	11.65	15.05
12	12.750	28.2	170.35	217.25	45.40	[illegible]	[illegible]	11.65	15.05
14	14.000	32.8	260.30	317.70	62.75	[illegible]	[illegible]	8.20	11.25
16	16.000	41.2	339.45	412.35	87.00	[illegible]	[illegible]	8.20	11.25
18	18.000	54.2	392.50	483.60	105.10	[illegible]	[illegible]	8.20	11.25
20	20.000	67.2	467.30	581.15	161.75	4	1 X 5 [illegible]	9.50	11.90
24	24.000	76.2	588.25	629.25	224.85	4	1 X 5 [illegible]	9.50	11.90

*Number of bolts equals number of segments supplied.
† Surcharge for couplings supplied without gasket. Contact Victaulic for pricing.

#Metric thread size bolts available, contact Victaulic.
J.I.S. 8", 10", 12" available, contact Victaulic.

SNAP JOINT® COUPLING
Style 78

PIPE		COMPLETE COUPLING†			SPARE PARTS	
Nominal Size (Inches)	Outside Diameter (Inches)	Weight Each (Lbs.)	Price Each Painted	Price Each Plated	Gasket Only Price Each	Bolt & Nut
1 (a)	1.315	0.8	$ 22.45	$ 25.50	$ 6.20	NO NUT AND BOLT REQUIRED
1¼ (a)	1.660	1.1	25.20	29.15	6.50	
1½ (a)	1.900	1.7	29.00	33.55	9.25	
2 (b)	2.375	1.8	29.40	34.15	9.25	
2½ (b)	2.875	2.5	38.25	45.30	11.25	
3 (b)	3.500	3.0	46.30	54.75	12.20	
4 (b)	4.500	5.4	59.60	73.20	15.60	
5 (c)	5.563	9.8	118.65	143.30	20.40	
6 (c)	6.625	11.4	128.70	154.80	22.05	
8 (c)	8.625	15.3	197.95	236.15	30.50	

(a) Available with steel toggle locking assembly only.
(b) Extended length cast handle standard; steel toggle is a no cost option.
(c) Available with cast handle only.
† Surcharge for couplings supplied without gasket. Contact Victaulic for pricing.

VIC-FLANGE®
Grooved to Flange Adapters
Style 741
Grooved Pipe Adapters to ANSI Class 125 and 150 Flanges

for elbows

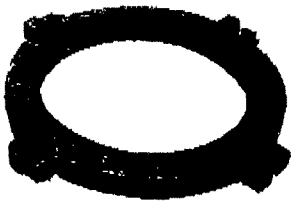

PIPE		VIC-FLANGE COMPLETE			SPARE PARTS
Nominal Size (Inches)	Outside Diameter	Wgt. Each (Lbs.)	Price Each Painted	Price Each Galv.	Gasket Price Ea.
STYLE 741 - Hinged					
2	2.375	3.1	$ 76.85	$ 88.40	$ 7.35
2½	2.875	4.7	95.65	112.10	8.70
3	3.500	5.4	103.20	121.90	9.70
4	4.500	7.7	138.45	163.25	12.60
5	5.563	9.3	150.75	189.75	15.70
6	6.625	10.3	175.55	207.90	17.95
6½ O.D.	6.500	10.0	175.55	207.90	17.95
8	8.625	16.6	198.25	241.95	24.45
10	10.750	24.2	314.40	380.05	31.65
12	12.750	46.8	411.50	503.10	36.70
STYLE 741 - Four Piece					
14	14.000	62.0	$944.90	$1105.50	$48.75
16	16.000	79.0	1096.35	1292.50	54.50
18	18.000	82.3	1349.70	1635.75	80.00
20	20.000	103.3	1624.50	1976.90	86.50
24	24.000	142.0	2078.85	2550.05	95.95

The Vic-Flange adapters utilize standard ANSI 125/150 flange bolts (supplied by installer). Bolt hole pattern is standard for ANSI CL. 150 and 125 CL. flanges. Flanged Adapter Nipples are also available in ¾" and larger sizes in ANSI CL 125, CL. 150, CL 300 and other ANSI ratings – quoted on application. PN10 and PN16 Flanges, sizes 60 - 406 mm, available. Contact Victaulic. Australian Table "E" available - 2, 3, 4, 6, 6.5, 8. Contact Victaulic.

FLANGE BOLT AND NUT SETS

Flange Size (Inches)	BOLT AND NUT Quantity Per Set	BOLT AND NUT Size # (Inches)	Price Per Set
3	4	⅝ × 3	$13.75
4	8	⅝ × 3	27.40
5	8	¾ × 3½	30.50
6	8	¾ × 3½	30.50
8	8	¾ × 3½	30.50
10	12	⅞ × 4	69.65
12	12	⅞ × 4	69.65
14	12	1 × 4½	142.15
16	16	1 × 4½	189.50
18	16	1⅛ × 4¾	303.45
20	20	1⅛ × 5¼	390.00
24	20	1¼ × 5¾	463.00

FLANGE WASHERS

Vic-Flange Nominal Size (Inches)	Style 741	Style 743
2	$24.85	$24.85
2½	25.90	25.90
3	30.60	30.60
4	35.80	35.80
5	43.45	43.45
6 & 6 O.D.	49.55	49.55
8	63.05	63.05
10	87.75	87.75
12	113.65	113.65
14	123.90	—
16	220.85	—
18	295.30	—
20	270.30	—
24	453.90	—

VIC-FLANGE ADAPTER ACCESSORIES

Vic-Flange adapters require a smooth, hard surface at the mating flange face for effective sealing. Some applications for which the Vic-Flange adapter is otherwise well suited do not provide an adequate mating surface. In such cases, it is recommended that a metal Flange Washer be inserted between the Vic-Flange adapter and the mating flange to provide the necessary sealing surface.

Typical applications where a Vic-Flange Washer should be used are:

1. When mating to a serrated flange: a flange gasket should be used adjacent to the serrated flange and then the Flange Washer is inserted between the Vic-Flange adapter and the flange gasket.
2. When mating to a wafer valve: where typical valves are rubber lined and partially rubber faced (smooth or not), the Flange Washer is placed between the valve and the Vic-Flange adapter.
3. When mating to a rubber faced flange: the Flange Washer is placed between the Vic-Flange adapters and the rubber faced flange.
4. When mating C.I. flanges to IPS flanges: the Flange Washer is placed between two Vic-Flange adapters. If one flange is not a Vic-Flange adapter (e.g., flanged valve), then a flanged gasket must be placed adjacent to that flange and the Flange Washer inserted between the flange gasket and the Vic-Flange adapter.
5. When mating to components (valves, strainers, etc.) where the component flange face has an insert: follow the same [redacted] as in Application 1.

ELBOWS

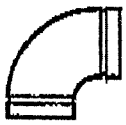

No. 10

No. 11

No. 12

No. 13

Nom. Size (Inches)	90° ELBOW No. 10			45° ELBOW No. 11			22½° ELBOW No. 12			11¼° ELBOW No. 13		
	Wgt. Each (Lbs.)	Price Each		Wgt. Each (Lbs.)	Price Each		Wgt. Each (Lbs.)	Price Each		Wgt. Each (Lbs.)	Price Each	
		Painted	Galv.		Painted	Galv.		Painted	Galv.		Painted	Galv.
¾	0.5	$ 25.55	$ 32.25	0.5	$ 25.55	$ 30.35	–	—	—	–	—	—
1	0.6	25.55	32.25	0.6	25.55	30.35	0.6	$ 27.30	$ 33.55	0.3 (sw)	$ 65.25	$ 72.65
1¼	0.9	25.55	32.25	0.9	25.55	30.35	0.8 (sw)	27.30	33.55	0.5 (sw)	65.25	72.65
1½	1.1	25.55	32.25	0.9	25.55	30.35	0.8 (sw)	27.30	33.55	0.5 (sw)	65.25	72.65
2	2.0	25.55	32.25	1.8	25.55	30.35	1.4‡	27.30	33.55	1.0	65.25	72.65
2½	3.0	25.55	32.25	2.2	25.55	30.35	1.5‡	27.30	33.55	1.5 (sw)	65.25	72.65
3	4.9	45.45	54.20	3.1	45.45	51.05	3.1‡	40.00	48.25	2.1	40.00	47.65
3 O.D.	5.0	25.55	32.25	3.4 (sw)	25.55	30.35	–	—	—	–	—	—
3½	5.6	52.95	66.40	4.3	52.95	63.00	4.0 (sw)	95.75	122.00	2.7 (sw)	95.75	107.60
4	8.5	49.55	66.00	5.6	49.55	61.65	5.6	53.65	66.25	3.6	53.65	62.95
4¼ O.D.	8.5	49.55	66.00	5.6	49.55	61.65	–	—	—	–	—	—
*4½	10.0 (sw)	+	+	6.0 (sw)	+	+	6.6	+	+	4.2 (sw)	+	+
5	11.4	119.70	147.50	8.3	119.70	141.35	7.8 (sw)	166.40	191.40	5.0 (sw)	166.40	186.60
5¼ O.D.	11.4	119.70	147.50	8.3	119.70	141.35	–	—	—	–	—	—
5½ O.D.	11.4	119.70	147.50	8.3	119.70	141.35	–	—	—	–	—	—
6	18.4	140.60	177.95	11.7	140.60	169.20	12.2‡	152.00	184.55	7.0	152.00	174.90
6¼ O.D.	18.6	140.60	177.95	11.7	140.60	169.20	–	—	—	–	—	—
6½ O.D.	18.8	140.60	177.95	11.8	140.60	169.20	11.4 (sw)	+	+	7.4	+	+
8	35.1	294.55	369.85	20.4	294.55	352.05	20.0‡	318.15	376.45	10.1	271.65	307.40
10	67.8	458.55	564.95	37.5	398.20	475.85	30.0 (sw)	436.80	539.50	11.8 (sw)	407.55	463.00
12	74.0	734.95	901.75	66.7	693.15	814.80	40.0 (sw)	590.50	696.70	29.3 (sw)	590.50	680.55
14@	164.0*	1537.35	1897.55	82.0*	1041.40	1240.85	46.0 (sw)	+	+	32.0 (sw)	+	+
16@	210.0*	1997.10	2456.20	100.0*	1295.75	1529.55	58.0 (sw)	+	+	42.0 (sw)	+	+
18@	273.0*	2534.85	3004.05	135.0*	1518.85	1770.85	65.0 (sw)	+	+	53.2 (sw)	+	+
20@	343.0*	3341.45	3942.80	174.0*	1995.80	2332.65	78.6 (sw)	+	+	65.0 (sw)	+	+
24@	516.0*	4838.95	5728.35	251.0*	3064.95	3552.05	140.0 (sw)	+	+	60.0 (sw)	+	+

*These fittings are same dimensions as No. 100 Long Radius Steel Elbows (1½" D).
‡Gooseneck design. (s) Forged steel. (sw) Segmentally welded steel.
@ Large diameter fittings are supplied standard with roll grooves. Contact Victaulic for cut groove pricing.

J.I.S. 90°, 45° available in 6", 10", 12" sizes. Contact Victaulic.

LONG RADIUS ELBOWS 1½D*

Nominal Size (Inches)	90° LONG RAD. ELBOW No. 100			45° LONG RAD. ELBOW No. 110		
	Weight Each (Lbs.)	Price Each		Weight Each (Lbs.)	Price Each	
		Painted	Galv.		Painted	Galv.
2	2.5	$ 59.75	$ 73.25	1.8	$ 50.95	$ 61.65
3	6.0	58.75	73.25	4.9	50.95	61.65
4	12.3	87.95	112.20	7.3	62.10	78.80
6	30.4	267.45	322.15	17.4	184.95	225.30
6½ O.D.	29.1	+	—	19.0	+	—
8	66.0	617.55	751.15	36.0	321.50	397.95
10	107.0	1024.40	1250.15	57.0	639.25	775.35
12	156.0	1466.45	1799.25	90.0	1005.10	1219.05
14@	164.0	1537.35	1897.55	82.0	1041.40	1240.85
16@	210.0	1997.10	2456.20	100.0	1295.75	1529.55
18@	273.0	2534.85	3004.05	135.0	1518.85	1770.85
20@	343.0	3341.45	3942.80	174.0	1995.80	2332.65
24@	516.0	4838.95	5728.35	251.0	3064.95	3552.05

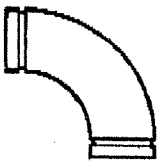

No. 100

No. 110

*See pages 29 & 30 for long radius 3-D, 5-D and 6-D elbows.
+Quoted on application. @ Large diameter fittings are supplied standard with roll grooves. Contact Victaulic for cut groove pricing.

Victaulic fittings are made of malleable or ductile iron except those marked (sw) segmentally welded steel; (s) steel.

APPLE 22

Grinnell®

Pipe Hangers

Catalog PH-98

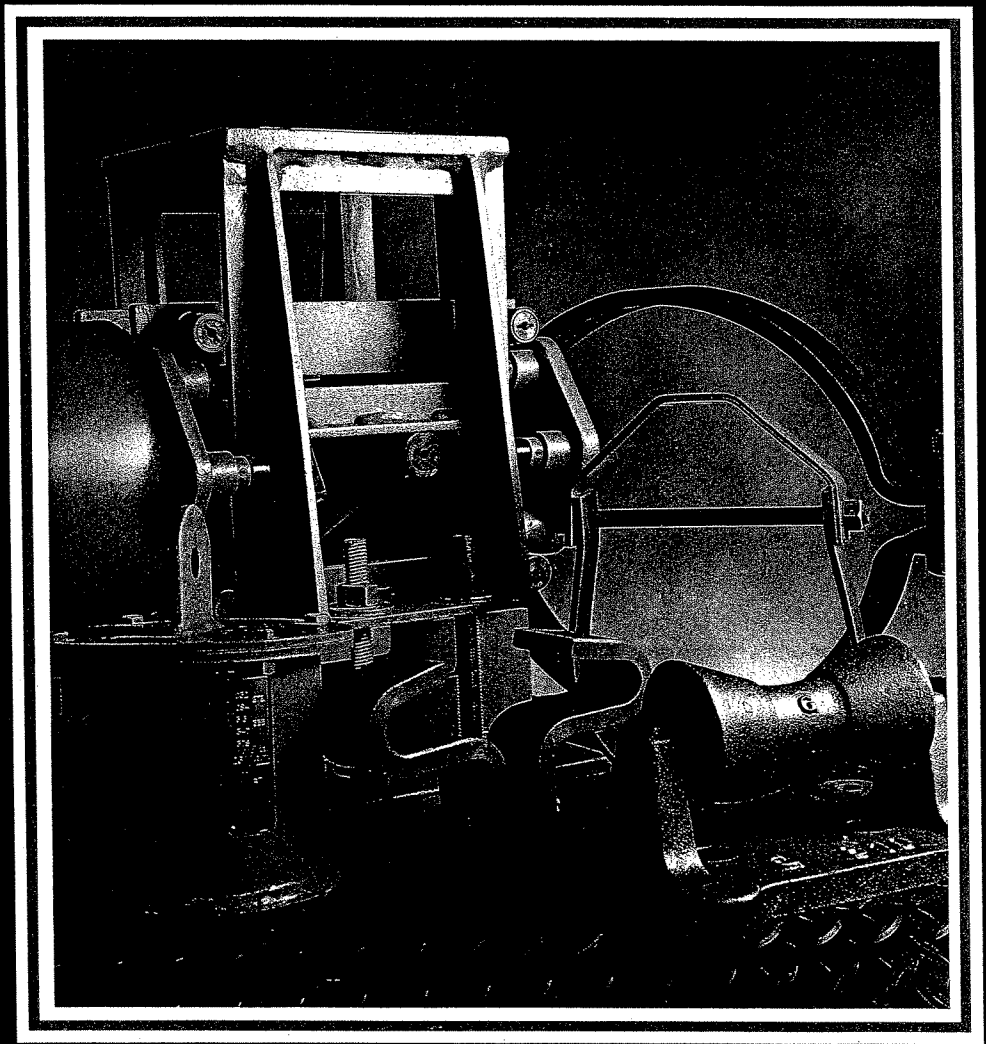

A tyco INTERNATIONAL LTD. COMPANY

pipe roll stand
complete: fig. 271
pipe roll and rod: fig. 272
pipe roll only: fig. 273

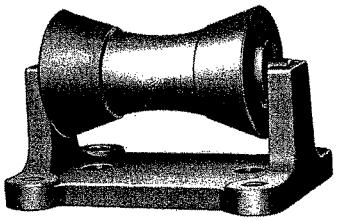

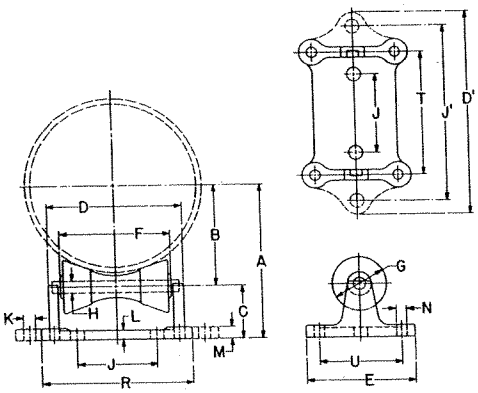

SIZE RANGE: 2 through 42 inch pipe.

MATERIAL: Cast iron roll and stand.

FINISH: Black or galvanized.

SERVICE: For support of pipe where longitudinal movement resulting from expansion and contraction may take place but vertical adjustment is unnecessary.

MAXIMUM TEMPERATURE: 450°F at roller.

APPROVALS: Complies with Federal Specification WW-H-171 E (Type 45) and Manufacturers Standardization Society SP-69 (Type 44).

INSTALLATION:

(1) Two cored holes "K" for anchorage bolts are provided on all sizes for fastening stands to welded stands, to welded steel brackets, structural supports, piers, floors, etc.

(2) In addition, cored holes "N" at the four corners of the stand are provided for anchorage purposes.

(3) The two cored holes "K" on sizes 2 to 6 inch are on outside of stand (see dotted lines and dimension J').

(4) On all other sizes, the holes "K" are inside of uprights (see dimension J).

HOW TO SIZE:

(1) If roll is to support bare pipe, select the size directly from nominal pipe size (see below).

(2) If used with pipe covering protection saddle, see pages ph-74-76 for size of pipe roll.

ORDERING: Specify pipe roll size, figure number, name. Be certain to order oversized rolls where insulation makes this necessary.

NOTE: Standard line of carbon steel base plates available.

loads • weights

pipe size	2 to 3½	4 to 6	8 to 10	12 to 14	16 to 20	24	30	36 to 42
max recom load, lb ■	390	950	2100	3075	4980	6100	7500	12000
complete, fig. 271: wgt (approx) lbs each	6.4	8.9	15.3	28.1	39.7	49.6	99.3	152.0
roll and rod, fig. 272: wgt (approx) lbs each	.9	13.5	5.3	10.1	15.7	19.5	33.9	59.0
roll only, fig. 273: wgt (approx) lbs each	.7	11.0	4.4	8.5	12.7	14.5	24.0	41.0

dimensions (inches)

pipe size	A	B	C	D	D'	E	F	G	H	J	J'	K	L	M	N	R	T	U
2 2½ 3 3½	3½ 3⅞ 4⅛ 4⅜	1¾ 2⅛ 2⅜ 2⅝	1¾	4	8⅜	5⅜	2¾	1⅞	½	...	6⅜	1	9/16	11/16	½	...	3 7/16	4
4 5 6	4 13/16 5 7/16 6 1/16	2¾ 3⅜ 4	2 1/16	5⅜	9⅞	5⅝	3¾	2 1/16	½	...	7⅞	1	¾	⅞	½	...	4 11/16	4¼
8 10	8 11/16 9 13/16	5¼ 6⅜	3 7/16	7¾	...	6⅝	6	3¼	¾	4	...	1	¾	⅞	⅝	8⅝	7	5
12 14	11⅜ 12	7½ 8⅛	3⅞	9⅞	...	7⅞	8	4	⅞	5¾	...	1	¾	⅞	¾	10 15/16	9 1/16	6
16 18 20	13⅝ 14⅝ 15⅝	9⅜ 10⅜ 11⅜	4¼	11¼	...	8⅝	9	4½	1⅛	6¾	...	1	⅞	1	13/16	12⅜	10¼	6½
24	17¾	13⅜	4⅜	12½	...	8⅝	10	4 7/16	1¼	7½	...	1	1	1⅛	13/16	13½	11⅜	6½
30	21⅞	16¾	5⅛	15¾	...	10¾	12½	5½	1¾	10	...	1	1¼	1½	1 1/16	17	14¼	8
36 42	25¾ 28⅞	20 23⅛	5¾	18¾	...	12	15	6⅜	2	12	...	1	1½	1¾	1 5/16	20	17	9

■ Based on roll and stand only

pipe covering protection saddle

for nominal thickness of covering:

1 inch: fig. 160
1½ inch: fig. 161
2 inch: fig. 162
2½ inch: fig. 163
3 inch: fig. 164
4 inch: fig. 165
4 inch (Alloy): fig. 165A
5½ inch (Alloy): fig. 166A

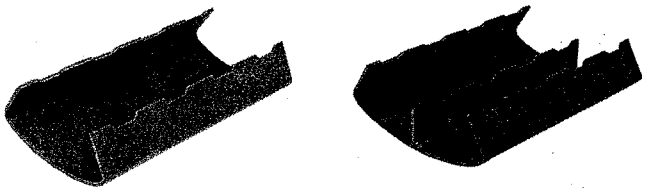

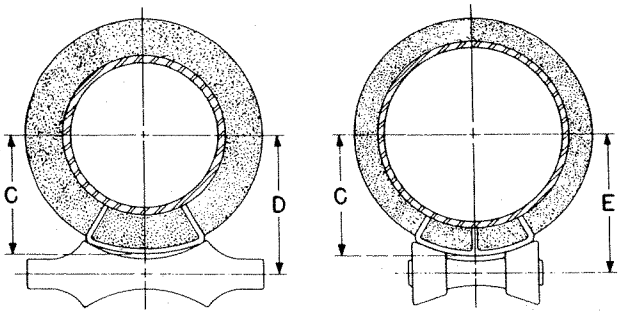

saddle with roll fig. 173 *saddle with roll fig. 273*

SIZE RANGE: For use with ¾ to 36 inch pipe.

MATERIAL: Figs. 160, 161, 162, 163, 164 and 165 are curved carbon steel plate. Figs. 165A and 166A are alloy steel manufactured from ASTM A-387 Grade 22 Chrome Molybdenum steel plate. Figs. 165A and 166A have a welded-in center plate in all sizes. All other saddles have a welded-in center plate for pipe sizes 12 inch and larger. All saddles are 12 inches long with side edges turned up.

SERVICE: Designed for high temperature service or where heat losses are to be kept at a minimum and to protect insulation against damage.

MAXIMUM TEMPERATURE: 650°F Carbon Steel, 950°F Alloy Steel.

APPROVALS: Complies with Federal Specification WW-H-171E (Type 40A or Type 40B) and Manufacturers Standardization Society SP-69 (Type 39A or Type 39B).

FEATURES: Permits finished, weathertight covering at all points of pipe support.

ORDERING: Specify pipe size, figure number, name. Data for 42 inch size available on request.

FINISH: Black.

loads • weights • dimensions (inches)

pipe size	fig. no.	max recom load, lbs	wgt (approx) lbs each	actual thickness of covering	size of pipe roll: figs. 171, 175 177	size of pipe roll: figs. 174, 181	size of pipe roll: figs. 271-277	center line of pipe to outside of saddle C	center line of pipe to center line of roll: D: figs. 171, 175 177	center line of pipe to center line of roll: D: figs. 174, 181	center line of pipe to center line of roll: E
¾	160•	1200	1.4	⅞	2	2½	2-3½	1⅝	2 1/16	2⅛	2¼
	161•	1200	2.1	1 7/16	3	3½	2-3½	2 3/16	2¾	2¾	2⅞
	162•	1200	2.8	1⅞	4	5	2-3½	2 11/16	3 5/16	3 5/16	3⅜
1	160•	1200	1.4	1 1/16	2½	3	2-3½	1 13/16	2 5/16	2¼	2 7/16
	161•	1200	2.1	1 9/16	3	4	2-3½	2 5/16	2⅞	2⅞	3
	162•	1200	2.8	2⅛	4	5	2-3½	2⅞	3½	3½	3½
1¼	160	1200	1.4	⅞	2½	3	2-3½	1 15/16	2½	2 7/16	2 9/16
	161•	1200	2.1	1⅝	3½	5	2-3½	2 9/16	3 1/16	3 1/16	3 3/16
	162•	1200	2.8	1 15/16	4	5	2-3½	3	3⅝	3⅝	3 11/16
	163•	1200	3.6	2 7/16	5	6	4-6	3¾	4⅜	4⅜	4⅜
1½	160	1200	1.5	1	3	3½	2-3½	2⅛	2⅝	2⅝	2 11/16
	161•	1200	2.1	1½	3½	5	2-3½	2⅝	3¼	3¼	3 5/16
	162•	1800	3.2	2 5/16	5	6	4-6	3 5/16	4	4	3⅞
	163•	1800	3.6	2 13/16	6	8	4-6	3⅞	4½	4⅝	4½
2	160	1200	1.7	1 1/16	3½	4	2-3½	2⅜	3	2 15/16	3 1/16
	161•	1200	2.3	1 9/16	4	5	2-3½	2⅞	3½	3½	3 9/16
	162•	1800	3.2	2⅛	5	6	4-6	3 9/16	4¼	4¼	4 3/16
	163•	1800	3.6	2⅝	6	8	4-6	4 1/16	4¾	4 13/16	4¾
	164•	1800	4.5	3⅛	8	8	4-6	4 9/16	5⅜	5⅜	5¼

continued next page

■ Maximum recommended loads are applicable only when saddle is used on a flat bearing surface and tack welded to pipe. When saddle is used with a pipe roll, the maximum load for the assembly is the smaller of the two loads.
• Saddles may require notching when used with a U-bolt.

Grinnell

protection saddle

25

loads • weights • dimensions (inches) *(continued)*

pipe size	fig. no.	max recom load, lb■	wgt (approx) lbs each	actual thickness of covering	size of pipe roll: figs. 171, 175 177	size of pipe roll: figs. 174, 181	size of pipe roll: figs. 271-277	center line of pipe to outside of saddle, C	center line of pipe to center line of roll, D: figs. 171, 175 177	D: figs. 174, 181	E
2½	160	1200	1.7	1 1/16	3½	5	2- 3½	2 11/16	3¼	3¼	3 5/16
	161•	1200	2.8	1⅞	5	6	4- 6	3 5/16	4	4	3 15/16
	162•	1200	3.2	2 5/16	6	8	4- 6	3⅞	4½	4⅝	4½
	163•	1200	4.1	2⅞	8	8	4- 6	4¼	5⅛	5⅛	5
	164•	1200	4.5	3⅜	8	10	4- 6	4⅞	5⅝	5¾	5½
3	160	1200	1.9	1	4	5	2- 3½	2 15/16	3½	3½	3 9/16
	161	1200	2.8	1 9/16	5	6	4- 6	3⅝	4 5/16	4 5/16	4¼
	162•	1200	3.6	2 1/16	6	8	4- 6	4⅛	4 13/16	4 13/16	4 11/16
	163•	1200	4.1	2 9/16	8	8	4- 6	4 11/16	5 7/16	5 7/16	5 5/16
	164•	1200	4.9	3 1/16	8	10	8-10	5 1/16	6	6	6 1/16
3½	160	1200	2.3	1¼	5	6	4- 6	3 5/16	4	4	3 15/16
	161	1200	3.2	1 13/16	6	8	4- 6	3 11/16	4 9/16	4 9/16	4½
	162•	1200	3.6	2¼	8	8	4- 6	4 5/16	5⅛	5⅛	5
	163•	1200	4.5	2¾	8	10	8-10	4 11/16	5⅝	5⅝	5 11/16
	164•	1200	4.9	3 5/16	10	10	8-10	5⅜	6 5/16	6 5/16	6⅜
4	160	1200	2.3	1 1/16	5	6	4- 6	3 9/16	4¼	4¼	4 3/16
	161	1200	3.2	1 9/16	6	8	4- 6	4 1/16	4⅞	4⅞	4¾
	162	1200	3.6	2 1/16	8	8	4- 6	4 9/16	5⅜	5⅜	5¼
	163	1200	4.5	2 9/16	8	10	8-10	5	5 15/16	5 15/16	6
	164•	1200	4.9	3 1/16	10	10	8-10	5⅝	6 9/16	6 9/16	6⅝
	165•	1200	6.1	4 1/16	10	12	12-14	6½	7⅝	7⅝	7 9/16
	165A•	7200	11.6	4 1/16	10	12	12-14	6½	7⅝	7⅝	7 9/16
	166A•	7200	15.7	5 11/16	14	16	12-14	8⅛	9⅝	9½	9 5/16
5	160	1200	2.3	1	6	8	4- 6	4⅛	4 13/16	4 13/16	4¾
	161	1200	3.2	1½	8	8	4- 6	4 11/16	5½	5½	5⅜
	162	1200	3.6	2	8	10	8-10	5 3/16	6	6 1/16	6⅛
	163	1200	4.5	2 9/16	10	10	8-10	5⅝	6 9/16	6 9/16	6⅝
	164	1200	4.9	3 1/16	10	12	8-10	6 3/16	7⅛	7¼	7¼
	165•	1200	6.1	4 3/16	12	14	12-14	7⅛	8 3/16	8⅜	8 3/16
	165A•	7200	11.6	4 3/16	12	14	12-14	7⅛	8⅛	8⅜	8 3/16
	166A•	7200	15.7	5 11/16	16	16	12-14	8 11/16	10 1/16	10 1/16	9⅞
6	160	1800	3.8	1	8	8	4- 6	4½	5⅜	5⅜	5¼
	161	1800	4.4	1½	8	10	8-10	5 1/16	5⅞	5 11/16	6
	162	1800	5.7	2	10	10	8-10	5½	6 7/16	6 7/16	6½
	163	1800	6.5	2½	10	12	8-10	6 3/16	7⅛	7 3/16	7¼
	164	1800	7.7	3	12	12	8-10	6 9/16	7⅝	7⅝	7⅝
	165•	1800	10.2	4⅛	14	16	12-14	7 9/16	9	9	8¾
	165A•	7200	12.9	4⅛	14	16	12-14	7⅝	9⅛	9	8 13/16
	166A•	7200	16.3	5⅝	16	18	16-20	9⅛	10⅝	10 9/16	10 7/16
8	161	1800	5.8	1½	10	12	8-10	6	7 1/16	7 1/16	7 1/16
	162	1800	6.3	2	10	12	8-10	6½	7 9/16	7 9/16	7 9/16
	163	1800	7.2	2 11/16	12	14	8-10	7¼	8 5/16	8½	8 5/16
	164	1800	7.7	3⅛	14	16	12-14	7 11/16	9	9	8¾
	165	1800	10.2	4 3/16	16	18	16-20	8 11/16	10⅛	10⅛	9⅞
	165A	7200	16.9	4 3/16	16	18	16-20	8 11/16	10 1/16	10⅛	9⅞
	166A•	7200	22.6	5⅝	18	20	16-20	10¼	11⅞	11 13/16	11⅝
10	161	1800	5.8	1 9/16	12	14	8-10	7¼	8 5/16	8½	8 5/16
	162	1800	7.7	2 1/16	14	16	12-14	7⅝	9 1/16	9	8 13/16
	163	1800	8.2	2 9/16	14	16	12-14	8⅛	9 9/16	9 9/16	9 5/16
	164	1800	8.8	3 1/16	16	18	16-20	8 11/16	10⅛	10 1/16	10
	165	1800	10.8	4 1/16	18	20	16-20	9¾	11¼	11¼	11⅛
	165A	7200	18.9	4 1/16	18	20	16-20	9 11/16	11 5/16	11¼	11⅛
	166A•	7200	24.3	5 9/16	20	...	22-24	11⅛	12 15/16	...	12½

continued next page

■ Maximum recommended loads are applicable only when saddle is used on a flat bearing surface and tack welded to pipe. When saddle is used with a pipe roll, the maximum load for the assembly is the smaller of the two loads.
• Saddles may require notching when used with a U-bolt.

UNITED STATES

UNISTRUT®

GENERAL ENGINEERING CATALOG

UNISTRUT ALL PURPOSE METAL FRAMING

UNISTRUT
NEW MEXICO
P.O. Box 3128 — Zip Code 87190
4820 Pan American Hwy., N.E.
Albuquerque, N.M. 87109
Phone: (505) 881-0264

NO. 10 R

P 1000® CHANNEL AND COMBINATIONS

1⅝" UNISTRUT CHANNEL WIDTH SERIES

27

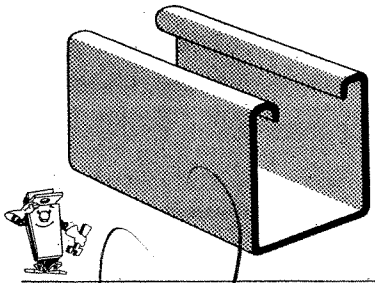

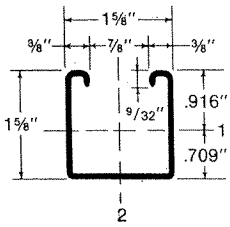

WT. LBS./C 190

P 1000 channel and combinations are roll formed from 12 gauge (.105") strip steel.

Standard lengths 10 and 20 feet.

P 1000 CHANNEL

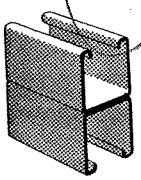

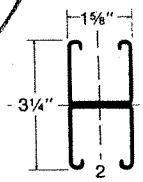

WT. LBS./C 380

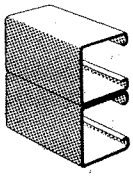

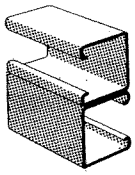

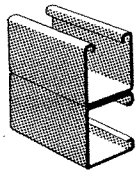

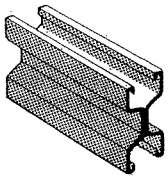

P 1001 **P 1001 A** **P 1001 B** **P 1001 C** **P 1001 K**

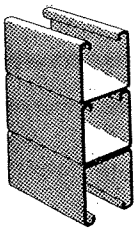

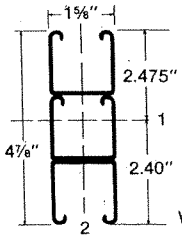

WT. LBS./C 570

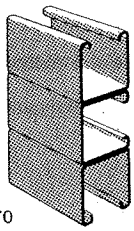

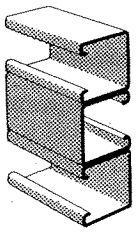

P 1001 3 **P 1001 A3** **P 1001 B3**

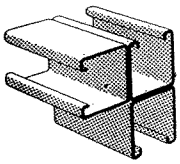

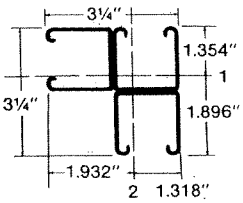

WT. LBS./C 570

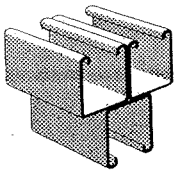

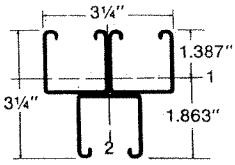

WT. LBS./C 570

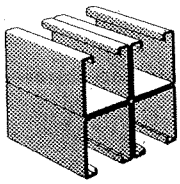

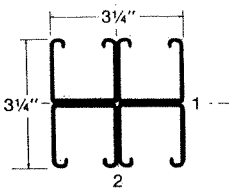

WT. LBS./C 760

P 1001 C3 **P 1001 D3** **P 1001 C41**

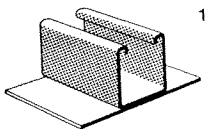

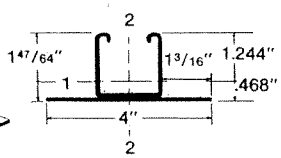

WT. LBS./C 335

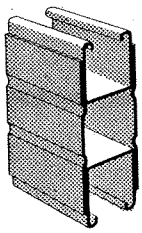

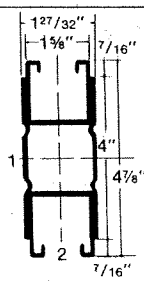

WT. LBS./C 670

P 1003 **P 1004 A**

BEAM LOADS

Allowable uniformly distributed loads are listed for various simple spans, that is, beam on two supports. If load is concentrated at center of span, multiply load from table by 0.5 and corresponding deflection by 0.8.

Stress 25,000 #/sq. in. — Recommended for use where deflection is not a factor on long spans.

Deflection 1/240 span — Recommended for use when deflection is a factor.

COLUMN LOADS

Column loadings are for allowable axial loads for the unsupported heights listed and include a K value of 0.80. For other K values see page 112. If loads are eccentric, loads should be reduced according to standard practice.

P 1000® CHANNEL AND COMBINATIONS

1⅝" UNISTRUT CHANNEL WIDTH SERIES

28

NOTE: "Long span deep beams should be supported in a manner to prevent rotation at supports and tied between supports to prevent twist."

BEAM AND COLUMN DATA

BEAM SPAN OR UNBRACED HEIGHT	CHANNEL	UNIFORM LOAD @ 25000 PSI	DEFLECTION @ 25000 PSI	UNIFORM LOAD @ 20000 PSI	DEFLECTION @ 20000 PSI	UNIFORM LOAD @ DEFLECTION = 1/240 SPAN	MAX. LOAD OF COLUMN LOADED @ C.G.	MAX. LOAD OF COLUMN LOADED @ SLOT FACE
24"	P1000	1690	.06	1350	.04	—	9800	4000
	P1001	2480*	.02	2480*	.02	—	22500	6200
	P1001C41	4970*	.02	4970*	.02	—	45700	12500
	P1004A	5860*	.01	5860*	.01	—	45800	12000
	P1001K	2550	.02	2550	.02	—	23000	7100
36"	P1000	1130	.12	900	.10	—	8200	3700
	P1001	2480*	.05	2480*	.05	—	21600	6100
	P1001C41	4970*	.05	4970*	.05	—	44800	12300
	P1004A	5860*	.03	5860*	.03	—	43500	11900
	P1001K	2550	.05	2550	.05	—	21000	6700
48"	P1000	850	.22	680	.18	760	6500	3500
	P1001	2380	.13	1900	.10	—	20400	5900
	P1001C41	4770	.13	3820	.10	—	43600	12000
	P1004A	5680*	.07	5550	.07	—	40800	11600
	P1001K	2550	.13	2050	.10	—	18600	6100
60"	P1000	680	.35	540	.28	490	5000	2700
	P1001	1900	.20	1520	.16	—	18900	5600
	P1001C41	3820	.20	3050	.16	—	42000	11500
	P1004A	5550	.13	4440	.10	—	37800	11300
	P1001K	2050	.19	1650	.16	—	15900	5100
72"	P1000	560	.50	450	.40	340	4000	2100
	P1001	1590	.28	1270	.23	—	17000	5100
	P1001C41	3180	.28	2540	.23	—	40000	11100
	P1004A	4630	.19	3700	.15	—	34500	10700
	P1001K	1700	.28	1370	.23	—	12800	4000
84"	P1000	480	.68	390	.54	250	3400	1800
	P1001	1360	.38	1090	.31	1240	14800	4600
	P1001C41	2730	.38	2180	.31	2490	37800	10500
	P1004A	3970	.26	3170	.20	—	30800	9900
	P1001K	1450	.38	1180	.31	1350	9600	3200
96"	P1000	420	.89	340	.71	190	2900	1600
	P1001	1190	.50	950	.40	950	12300	4000
	P1001C41	2380	.50	1910	.40	1900	35100	10000
	P1004A	3470	.33	2780	.27	—	26800	9000
	P1001K	1300	.50	1050	.40	1050	7400	2500
108"	P1000	380	1.12	300	.90	150	2600	1400
	P1001	1060	.63	850	.51	750	9700	3400
	P1001C41	2120	.63	1700	.51	1500	32200	9300
	P1004A	3080	.42	2470	.34	—	22500	7900
	P1001K	1150	.63	920	.51	810	5800	**
120"	P1000	340	1.39	270	1.11	120	2200	1200
	P1001	950	.78	760	.63	610	7900	2900
	P1001C41	1910	.78	1530	.63	1220	28800	8700
	P1004A	2780	.52	2220	.42	2660	18300	6900
	P1001K	1050	.78	820	.63	660	4700	**

*LOAD LIMITED BY SPOT WELD SHEAR **$\frac{KL}{r}$ EXCEEDS (200)

ELEMENTS OF SECTION

CHANNEL	WT./FT. LBS.	AREA OF SECTION SQ. IN.	AXIS 1-1 I In.⁴	AXIS 1-1 S In.³	AXIS 1-1 r In.	AXIS 2-2 I In.⁴	AXIS 2-2 S In.³	AXIS 2-2 r In.
P 1000	1.90	.555	.186	.203	.579	.239	.294	.655
P 1003	3.35	.975	.325	.261	.577	.799	.400	.905
P 1001	3.80	1.110	.930	.572	.915	.478	.588	.656
P 1001 D3	5.70	1.665	1.302	.699	.844	1.450	.892	.933
P 1001 C3	5.70	1.665	1.413	.745	.921	1.521	.788	.956
P 1001 C41	7.60	2.220	1.860	1.145	.915	2.422	1.490	1.044
P 1001 3	5.70	1.665	3.132	1.267	1.371	.717	.882	.656
P 1004 A	6.70	1.950	4.062	1.666	1.443	1.107	1.207	.754
P 1000 K	3.50	1.026	1.005	.618	.989	.286	.352	.528

I — Moment of Inertia S — Section Modulus r — Radius of Gyration

STRENGTH OF P 1010 NUTS USED IN P 1000 CHANNEL

Resistance to Slip — 1500 Lbs. per bolt
Pull Out Strength — 2000 Lbs. per bolt
Minimum Safety Factor of 3

P 5000™ CHANNEL AND COMBINATIONS

1⅝" UNISTRUT CHANNEL WIDTH SERIES

29

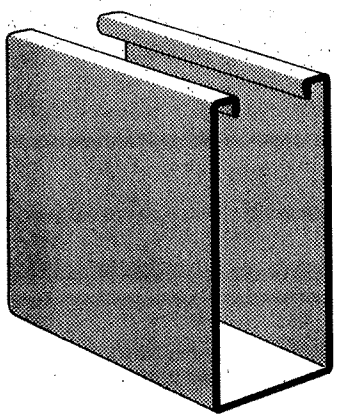

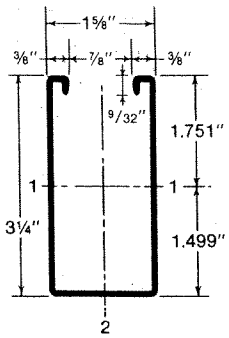

WT. LBS./C FT. 305

P 5000 channel and combinations are roll formed from 12 gauge (.105") strip steel.

Standard lengths 10 and 20 feet.

P 5000 CHANNEL

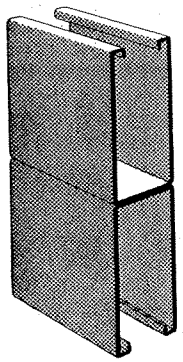

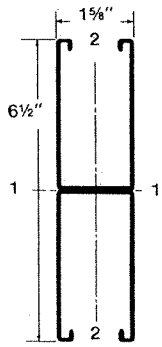

WT. LBS./C FT. 610

P 5001

BEAM LOADS

Allowable uniformly distributed loads are listed for various simple spans, that is, beam on two supports. If load is concentrated at center of span, multiply load from table by 0.5 and corresponding deflection by 0.8.

Stress 20,000 #/sq. in — Recommended for use where deflection is not a factor on long spans.
Deflection 1/240 span — Recommended for use when deflection is a factor.

COLUMN LOADS

Column loadings are for allowable axial loads for the unsupported heights listed and include a K value of 0.80. For other K values see page 112. If loads are eccentric, loads should be reduced according to standard practice.

ELEMENTS OF SECTION

CHANNEL	WT./FT. LBS.	AREA OF SECTION SQ. IN.	AXIS 1-1 I In.⁴	AXIS 1-1 S In.³	AXIS 1-1 r In.	AXIS 2-2 I In.⁴	AXIS 2-2 S In.³	AXIS 2-2 r In.
P 5000	3.05	.896	1.094	.625	1.105	.436	.537	.697
P 5001	6.10	1.792	6.215	1.912	1.862	.872	1.074	.697

I — Moment of Inertia S — Section Modulus r — Radius of Gyration

P 5000™ CHANNEL AND COMBINATIONS

1⅝" UNISTRUT CHANNEL WIDTH SERIES

30

NOTE: "Long span deep beams should be supported in a manner to prevent rotation at supports and tied between supports to prevent twist."

BEAM AND COLUMN DATA

BEAM SPAN OR UNBRACED HEIGHT	CHANNEL	UNIFORM LOAD @ 20000 PSI	DEFLECTION @ 20000 PSI	UNIFORM LOAD @ DEFLECTION = 1/240 SPAN	MAX. LOAD OF COLUMN LOADED @ C.G.	MAX. LOAD OF COLUMN LOADED @ SLOT FACE
24"	P5000	4160	.02	—	8400	4900
	P5001	4880*	.01	—	18200	9000
36"	P5000	2780	.05	—	7500	4800
	P5001	4880*	.02	—	17900	8900
48"	P5000	2080	.09	—	6300	4100
	P5001	4880*	.04	—	17500	8700
60"	P5000	1670	.15	—	5000	2800
	P5001	4880*	.08	—	17000	8500
72"	P5000	1390	.21	—	3800	2100
	P5001	4250	.11	—	16300	8300
84"	P5000	1190	.28	—	3100	1700
	P5001	3640	.15	—	15600	7800
96"	P5000	1040	.37	—	2600	1500
	P5001	3180	.20	—	14700	7200
108"	P5000	920	.47	880	2200	1300
	P5001	2830	.25	—	13700	6600
120"	P5000	830	.58	720	2000	1100
	P5001	2550	.31	—	12500	5800

*LOAD LIMITED BY SPOT WELD SHEAR

BEAM SPAN	CHANNEL	UNIFORM LOAD @ 20000 PSI	DEFLECTION @ 20000 PSI	UNIFORM LOAD @ DEFLECTION = 1/240 SPAN
12'-0"	P5000	690	.84	500
	P5001	2120	.45	—
14'-0"	P5000	590	1.14	370
	P5001	1820	.61	2080
16'-0"	P5000	520	1.49	280
	P5001	1600	.80	1600
18'-0"	P5000	460	1.88	220
	P5001	1410	1.01	1260
20'-0"	P5000	410	2.30	180
	P5001	1270	1.25	1020

STRENGTH OF P 3010 NUTS USED IN P 5000 CHANNEL

Resistance to Slip — 1500 Lbs. per bolt
Pull Out Strength — 2000 Lbs. per bolt
Minimum Safety Factor of 3

NINETY DEGREE ANGLE FITTINGS

1⅝" UNISTRUT CHANNEL WIDTH SERIES

31

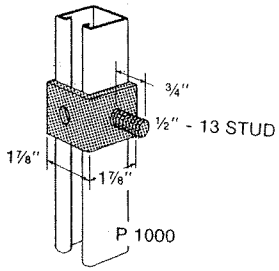

WT. LBS./C 45

P 1315

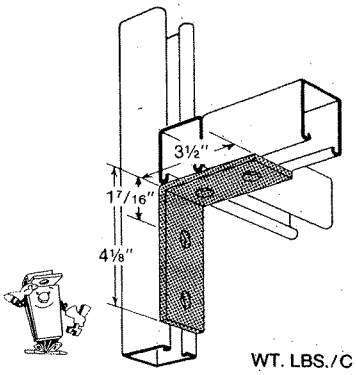

WT. LBS./C 78

P 1325

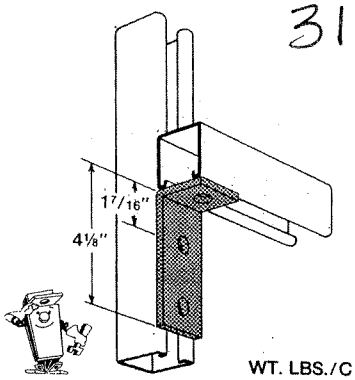

WT. LBS./C 58

P 1326

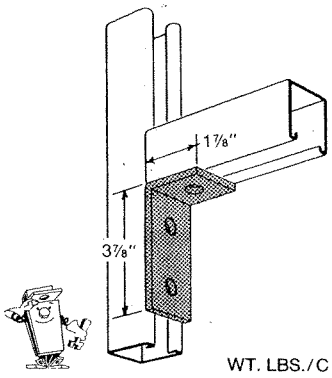

WT. LBS./C 58

P 1346

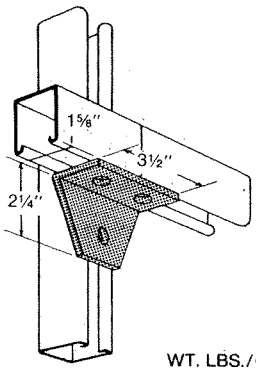

WT. LBS./C 70

P 1357

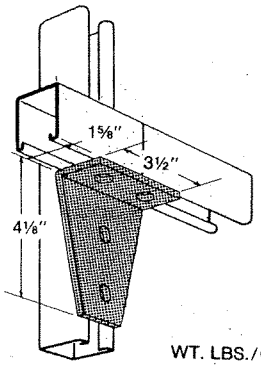

WT. LBS./C 105

P 1359

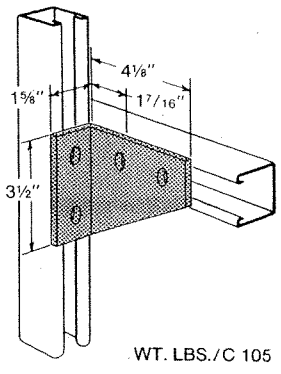

WT. LBS./C 105

P 1381

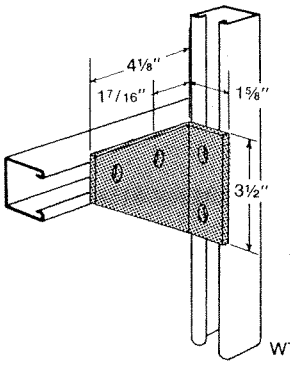

WT. LBS./C 105

P 1382

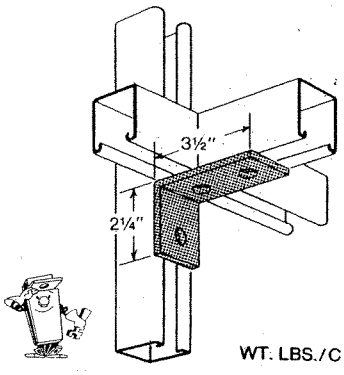

WT. LBS./C 58

P 1458

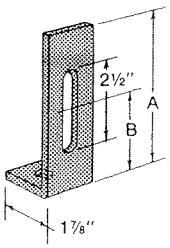

	A	B	WT. LBS./C
P 1498	4⅞"	2½"	65
P 1499	6⅞"	4½"	85

P 1498 & P 1499

	A	WT. LBS./C
P 1538A	3⅞"	61
P 1538B	5⅞"	84
P 1538C	7⅞"	107
P 1538D	9⅞"	130

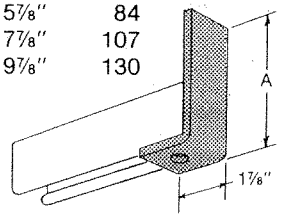

P 1538 A — P 1538 D

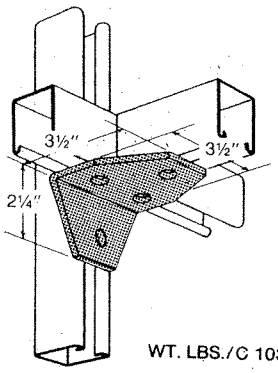

WT. LBS./C 103

P 1579

HOLE SIZE	9/16" DIAMETER	WIDTH	1-5/8"
HOLE SPACING	13/16" FROM END 1-7/8" ON CENTER	THICKNESS	1/4"

WING SHAPE FITTINGS

1⅝" UNISTRUT CHANNEL WIDTH SERIES

32

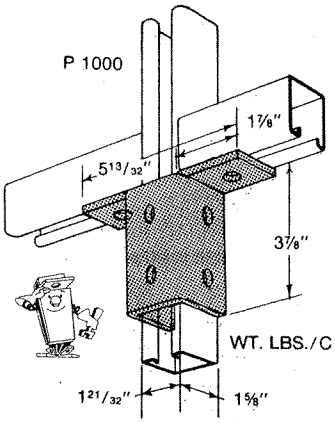

P 2346

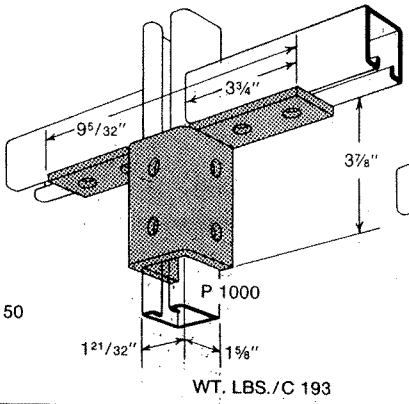

P 2347

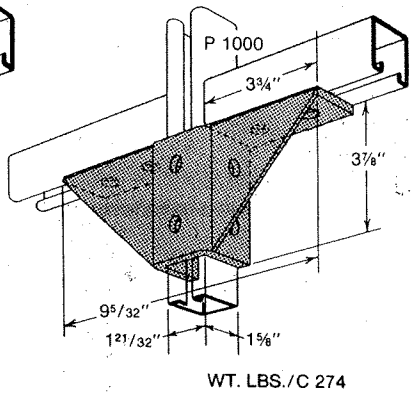

P 2348

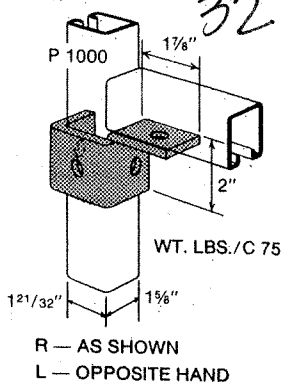

P 2472 R-L

POST BASES

1⅝" UNISTRUT CHANNEL WIDTH SERIES

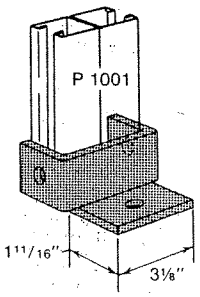

P 2453

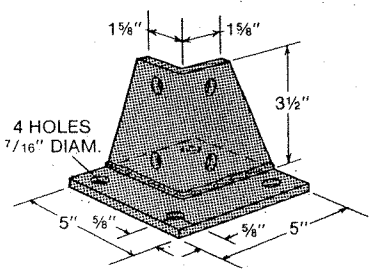

P 1887

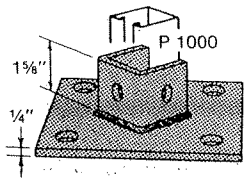

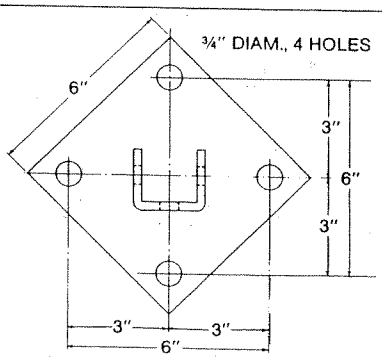

WT. LBS./C 307

P 2072

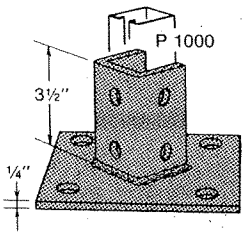

WT. LBS./C 373

P 2072 A

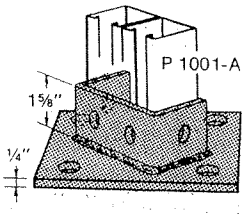

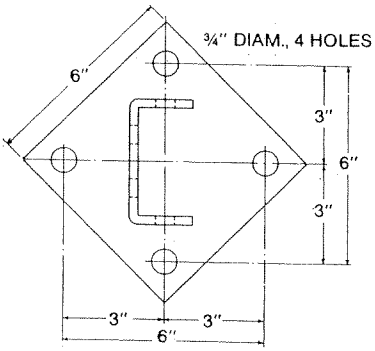

WT. LBS./C 325

P 2073

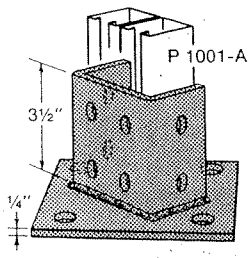

WT. LBS./C 408

P 2073 A

HOLE SIZE	9/16" DIAMETER	WIDTH	1-5/8"
HOLE SPACING	13/16" FROM END 1-7/8" ON CENTER	THICKNESS	1/4"