HNR

STRUCTURAL CALCULATION COVER SHEET

Date: 10-16-01

1 of 26

Calculation No:3442.053.SCAL.005,
Calculation Title: CCF VFD FREE STANDING FLOOR MOUNTED SUPPORT
Project ID # 100256
Project Title: CCN CHILLED WATER SYSTEM OPTIMIZATION MASTER PLAN

ORIGINAL AND REVISED CALCULATION/ANALYSIS APPROVAL

PAGES 26

	Rev. A Name/Signature/Date	Rev. 0 Name/Signature/Date	Rev._ Name/Signature/Date
Originator: DAVID APPLE	10/16/01	8-28-02	
Checked By: JIM WEEKS	10/16/01	8/28/02	
Approved By: JIM WEEKS	10/16/01	8/28/02	
Other:			

AFFECTED DOCUMENTS

Document Number	Document Title	Rev. Number
Drawing No. C52952	CCN Chilled Water System Optimization Master Plan	T1, M1-M33 Rev. B E1-E14 Rev. A
Drawing No. C52952	CCF/LDCC Cooling Plant Modifications	Rev. 0
Drawing No. C53116	LDCC EC-1 Modifications	Rev. 0

Record of Revision

Rev.	Reason for Revision
REV A	FIRST SUBMITTAL OF CALCULATIONS
Rev. 0	All pages of this calculation 3442.053.SCAL.005 Rev. A are considered Rev. 0, approved and released based upon no technical changes to the calculation during /after formal review.

HNR Holmes & Narver | Raytheon **STRUCTURAL DESIGN CALCULATION SHEET**	Project Title: CCN CHILLED WATER SYSTEM OPTIMIZATION MASTER PLAN Project ID #100256 Task Order # 053 2 of 26
Calculation No. 3442.053.SCAL.005 **Rev. No.** A **Calculation Title:** CCF VFD FREE STANDING FLOOR MOUNTED SUPPORT	PERFORMED BY : DAVID APPLE 10/16/01 CHECKED BY: JIM WEEKS 10/16/01

INTRODUCTION Purpose	Provide calculations and details for a free standing floor mounted support for two Variable Frequency Drive (VFD) control units.
Scope	Design a floor mounted support for two VFD units.
DESIGN BASIS Design Inputs	The CCF facility is considered a Performance Category (PC) 1 facility. VFD weight and floor stand component weights provided by Mechanical Engineer and from manufacturers printed information.
Criteria	LANL Facility Engineering Manual, Chapter 5 (Ref. 1) LANL Specification Section 13085, Seismic Protection (Ref. 2)
Assumptions	The CCF concrete strength, f'c, is at least 3000 psi.
REFERENCES	(1) LANL Facility Engineering Manual, Chapter 5 (2) LANL Specification Section 13085, Seismic Protection (3) ASCE 7-98 (4) AISC Manual of Steel Construction, 9th Edition (5) IBC 2000 (6) DOE-STD-1020-94
METHODS	Hand calculations were used to prepare these calculations.
RESULTS AND CONCLUSIONS	Design calculations and details have been provided to support the specified VFD units for this project.

Holmes & Narver | Raytheon

CALCULATION CHECKLIST

Task/Project #: 100256
Task Order 053
CCN CHILLED WATER SYSTEM OPTIMIZATION MASTER PLAN

Calculation Number: 3442.053.SCAL.005 3 of 26 | Revision A

Reviewer/Checker : JIM WEEKS

Reviewer performed or supervised subject calculation.
_____NO __X__YES Justification Attachment _____, _____ pages

Alternate Verification method approved _____ Method _____

Date 10/15/01

ITEM(S) CHECKED	Accept Y/N	OBJECTIVE EVIDENCE Sheets		INITIAL/ DATE
1. Cover forms properly completed.	Y			10/15
2. Calculation Sheet headers complete with calc. no., rev., etc.	Y			10/15
3. Calculation Sheet contents complete per format.	Y			10/15
4. Listed attachments included.	Y			10/15
5. Calculation Objective clearly described.	Y			10/15
6. Criteria are suitable and properly referenced to task-specific documents.	Y			10/15
7. Assumptions and data described and attached or referenced to task documents.	Y			10/15
8. Calculation method identified and appropriate for the design activity.	Y			10/15
9. Calculation results reasonable and correctly described in Results and Conclusions.	Y			10/15
10. Computer Program identified with version and revision.	N/A			
11. Computer Program references method used, etc.	N/A			
12. Computer input/output provided.	N/A			
13. Computer run traceable to calculation.	N/A			
14. Computer input data within permissible design input range.	N/A			
15. Computer Program validation/verification addressed.	N/A			

REMARKS

_____ Date 10/15/01
Checker Print Name & Sign
JIM WEEKS

_____ Date 10-16-01
Preparer Print Name & Sign
DAVID APPLE

CHECKED Ø DATE 1/13

APPROVED Ø DATE 1/13

Holmes & Narver
ARCHITECTS - ENGINEERS
6501 Americas Parkway NE Suite 700
Albuquerque, NM 87110

JOB NO. 03410344 2.0053
3442.053.SCAC.005 REV. A
SHEET 4 OF 26

TITLE CCF VFD FREE STANDING FLOOR MOUNTED SUPPORT BY DAA DATE 9-28-01
CCN CHILLED WATER SYSTEM OPTIMIZATION MASTER PLAN
#100256

Provide a floor-stand for TWO ACH 400 HVAC AC DRIVES (SEE CUT SHEET, ATTACHED). -(R4 50HP)

Free standing stand

Unit, each = 125 lbs.

MOUNT UNIT w/ BOTTOM 24" A.F.F.

UNIT SIZE: WIDTH = 8.66 inch
DEPTH = 11.76 inch
HEIGHT = 56.58 inch
} CUT SHEET, ATTACHED (4'-8½")

ALLOW: 6" CLEAR BETWEEN UNITS

AS OF 10/1/01
NEW UNITS

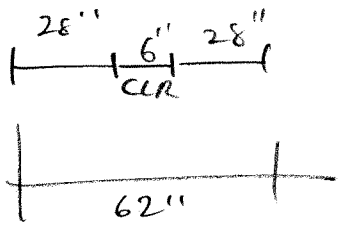

60" span
P5000
w_u = 1670 plf
P P @ 1/4 PTS
P = 1670# each
ok.

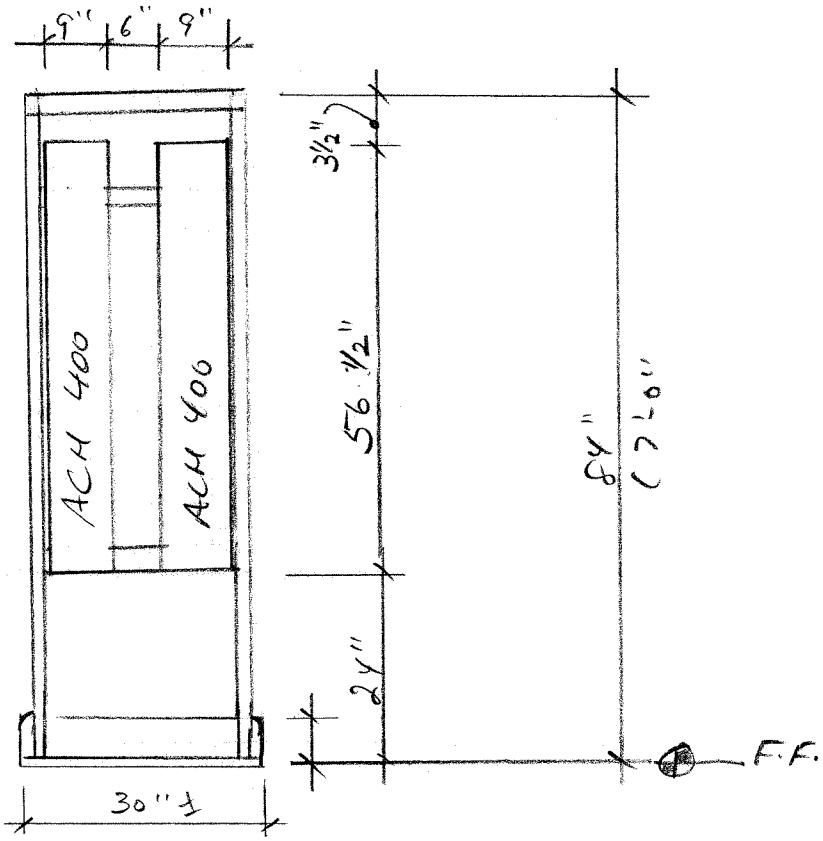

VFD SUPPORT
NTS

NOTE: 10/1/01 DAVID WALKER changed VFD to larger, heavier units. Details reused ⇒ ⊥L and P5000 used

FORM 8X8

CHECKED Ø DATE 10/13

APPROVED Ø DATE 10/13

Holmes & Narver
ARCHITECTS - ENGINEERS
6501 Americas Parkway NE Suite 700
Albuquerque, NM 87110

JOB NO. 034103442.0053
3442.053-SCAL.005 REV. A
SHEET 5 OF 26

TITLE CCF VFD FREE STANDING FLOOR MOUNTED SUPPORT
CCN CHILLED WATER SYSTEM OPTIMIZATION MASTER PLAN
BY DAA DATE 9-28-01

#100256

UNISTRUT P1000 CHANNEL

Columns Published data for column load maximum
assume: end condition $k = 0.80 \Rightarrow$ calculate by hand.

ASSUME: FIXED AT BASE, FREE AT TOP $K = 2.1$ (Tbl. C-C2.1) attached.

10/1/01
FOR NEW UNITS
P5000
$r_{1-1} = 1.105$

$l = 84$ inch (p. 1)
$r_{min} = r_{1-1} = 0.579$ inch

$\frac{kl}{r} = (2.1)(84\text{ in})/0.579\text{ inch} = 305 \geq 200$

$\frac{kl}{r} = 159.6$
still ok to use E2.2

$\therefore$ USE E2-2 (9th AISC ASD): $F_a = \frac{12\pi^2 E}{23(kl/r)^2}$

$F_a = \frac{12\pi^2 E}{23(159.6)^2}$

$F_a = \frac{12(\pi)^2(29000\text{ ksi})}{23(305)^2} = 1.6\text{ ksi}$

$F_a = 5.8$ ksi

$F_{all} = 1.6\text{ ksi}\ (0.555\text{ in}^2)$

$F = F_a$ Area
$= 5.8\text{ ksi}(0.896\text{ in}^2)$

$F_{all} = 0.89^k = 890$ lbs.

$F_{all} = 5.2K$
ok.

$F_{actual} = 125$ lbs + frame + wire $\ll 890$ lbs.

$\therefore$ P1000 vertical column is ok.

BEAM For a 24" SPAN. P1000 $w_u = 1350$ plf (@ 20000psi stress)
For concentrated load multiply by 0.5 = 675 lbs Dctr.

10/1/01
by inspection
P5000 ok
FOR NEW UNITS.

Assume only 1 horiz beam carries 2 panels w/ 2 bolts each $\Rightarrow P_{\downarrow} \ll 675$ lbs $\Rightarrow$ ok.

$\therefore$ P1000 horizontal beam members is ok.

$\Rightarrow$ CAN USE P5000 to match uprights.

10/1/01 Per David Walker - may use Megatek unit CPD 506 @ 264 lbs $\Rightarrow$ use 350 lbs each.

$F_{actual} = 350\text{ lbs/upright} \leq F_{all} = 890\text{ lbs/upright}$

$\Downarrow$

Better to use P5000 UPRIGHTS.

$\therefore$ P5000 ok for uprights.

FORM 8X8

CHECKED 8 DATE 10/3

APPROVED 8 DATE 10/3

Holmes & Narver
ARCHITECTS - ENGINEERS
6501 Americas Parkway NE Suite 700
Albuquerque, NM 87110

JOB NO. 034103442.0053
3442.053-SCAL.005 REV.A

SHEET 6 OF 26

TITLE CCF VFD FREE STANDING FLOOR MOUNTED SUPPORT BY DAA DATE 9-28-01
CCN CHILLED WATER SYSTEM OPTIMIZATION MASTER PLAN

#100256

CONNECTION AT FLOOR

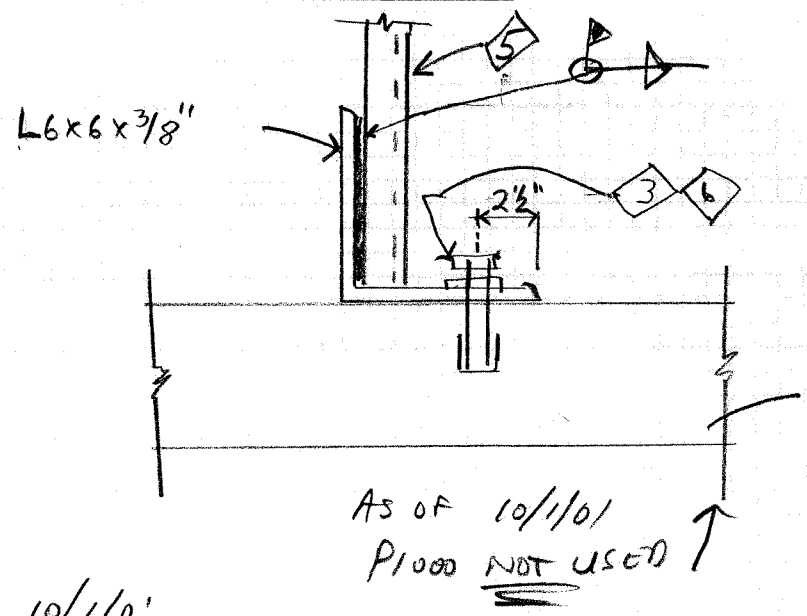

NOTES:

3. HILTI EXP. ANCHOR....
(USED NOTE ON FLOOR)
PIPE SUPPORT

5. UNISTRUT P1000 CHANNEL
PERMA-GREEN (GR)
FINISH

6. 3 bolts minimum.
space at 2" clear from
UPRIGHTS, AND at
EXISTING CONCRETE 12" O.C.
MAX.,
EACH L.

10/1/01
FOR NEW UNITS
USE

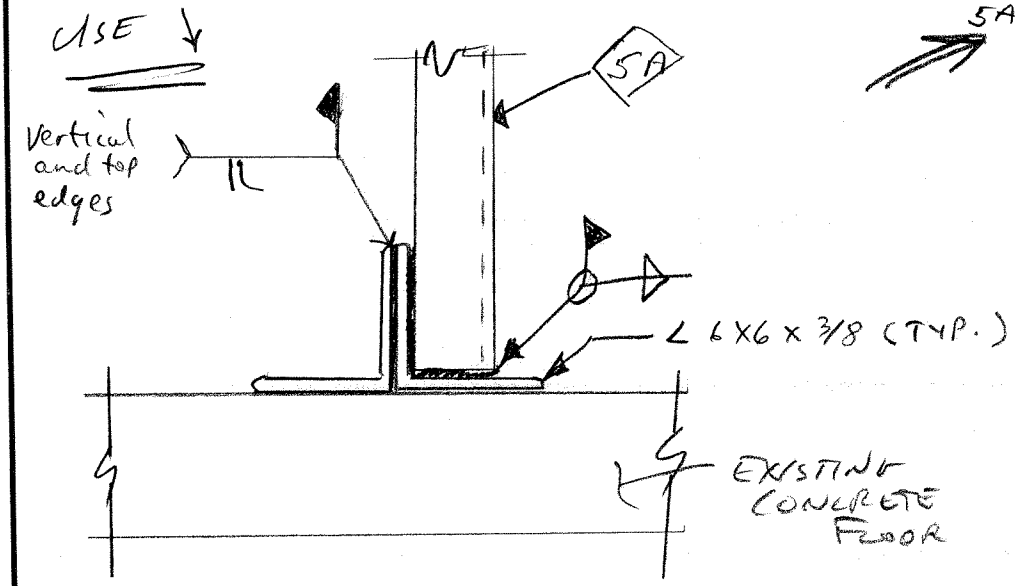

5A. UNISTRUT P5000
Perma Green (PG)
FINISH

FORM 8X8

CHECKED _____ DATE 10/3

APPROVED _____ DATE 10/3

Holmes & Narver
ARCHITECTS - ENGINEERS
6501 Americas Parkway NE Suite 700
Albuquerque, NM 87110

JOB NO. 034103442.0053
3442.053-SCAL.005 REV. A
SHEET 7 OF 26

TITLE CCF VFD FREE STANDING FLOOR MOUNTED SUPPORT BY DAA DATE 9-28-01
CCN CHILLED WATER SYSTEM OPTIMIZATION MASTER PLAN

#100256

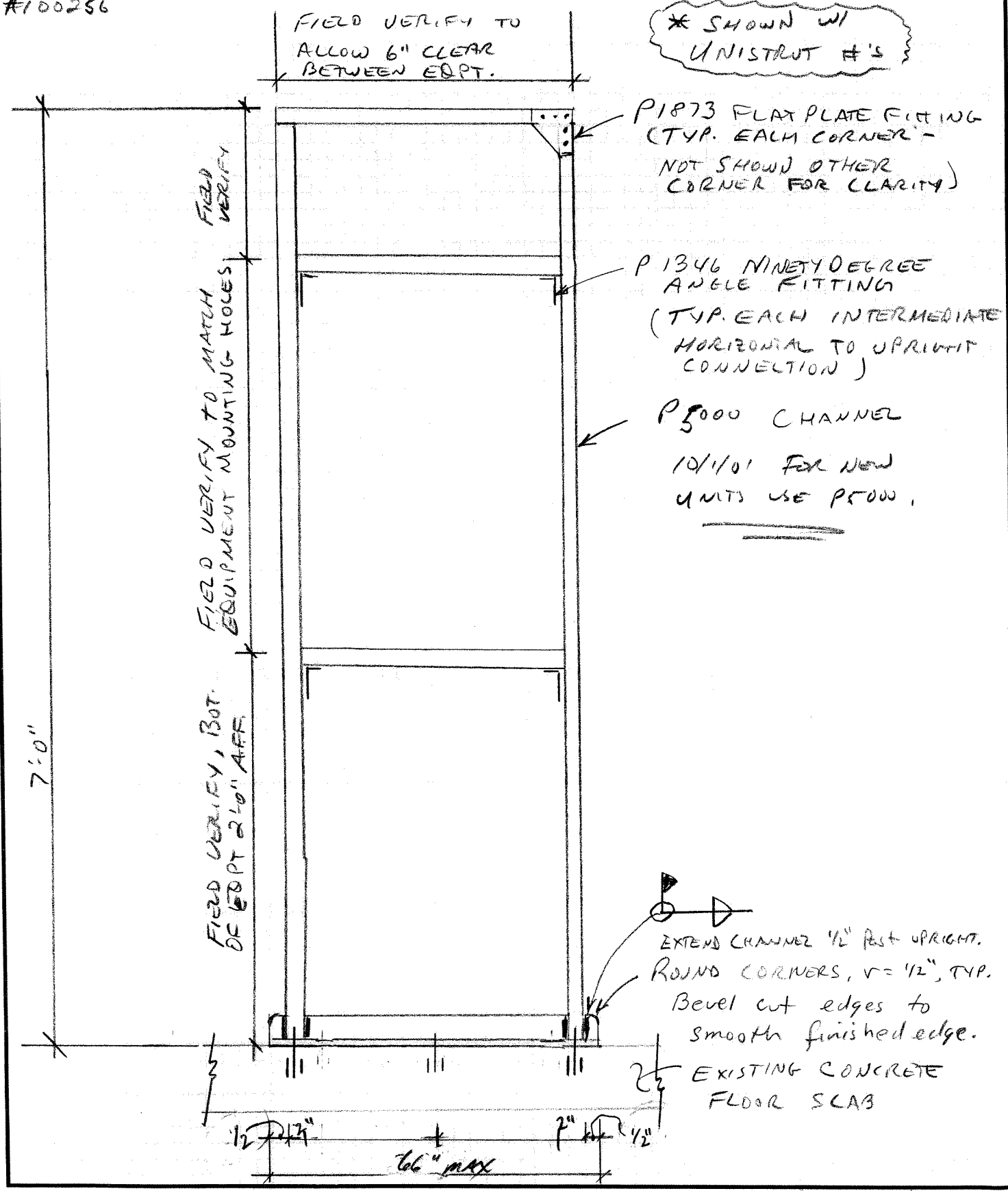

FORM 8X8

CHECKED _____ DATE 1-13

APPROVED _____ DATE 1-13

Holmes & Narver
ARCHITECTS - ENGINEERS
6501 Americas Parkway NE Suite 700
Albuquerque, NM 87110

JOB NO. 034103442.0053
3442.053-SCAL-005 REV. A

SHEET 8 OF 26

TITLE CCF VFD FREE STANDING FLOOR MOUNTED SUPPORT BY BAA DATE 9-28-01
CCN CHILLED WATER SYSTEM OPTIMIZATION MASTER PLAN
#100256

Check lateral seismic force: PC-1 Facility

2 ~ ACH 400 units @ 125 lbs each
Assume CG unit at 4 ft from bottom of unit
⇒ CG 6 ft from floor @ support.
⇒ W_p = 500 lbs (F.S. = 2)

Per LANL Eng. Manual, Ch 5:

$F_p = a_p C_a I_p W_p [1 + 3(h_x/h_r)]/R_p$ (202-5)

C_a = 0.28 } Table 202.1B, PC-1
I_p = 1.0
a_p = 2.5 } Table 202.3 Equipment, 3. below CG
R_p = 3.0
h_x = 0.0 basement level of bldg.
h_r = unkn.
→ h_x/h_r = 0.33 Conservative ≈ 1 of 3 floors?

$F_p = (2.5)(0.28)(1.0)(500 \text{ lbs})[1 + 3(0.33)]/(3.0)$

F_p = 232 lbs

$a_p[1 + 3(h_x/h_r)]R_p = (2.5)[1 + 3(0.33)]/(3.0) = 1.66$

$0.7 \le [a_p[1+3(h_x/h_r)]/R_p = 1.66] \le 4.0$ OK.

Alternate for F_p

$F_p = 4.0\, C_a I_p W_p$ (202-6)

$F_p = (4.0)(0.28)(1.0)(500\#) = 560$ lbs

Moment at Base due to F_p:

$M = F_p(h_{t_{CG}}) = 232 \text{ lbs}(6 \text{ ft}) = 1392$ lb-ft.

Convert to equivalent force couple
Lateral over 24" bolt spacing: 1392 lb-ft = X (12 ft)
X = 696 lbs, Say 700 lbs.
Long. over 3" (plate edge to bolt: 1392 = X (0.25 ft) X = 5568#

FORM 8X8

CHECKED Ø DATE 10/13

APPROVED Ø DATE 10/13

Holmes & Narver
ARCHITECTS - ENGINEERS
6501 Americas Parkway NE Suite 700
Albuquerque, NM 87110

JOB NO. 034103442.0053
3442.053.SCAL.005 REV.A

SHEET 9 OF 26

TITLE CCF VFD FREE STANDING FLOOR MOUNTED SUPPORT BY DAA DATE 9-28-01
CCN CHILLED WATER SYSTEM OPTIMIZATION MASTER PLAN
#100256

For Lateral Fp: T_{bolt} = 700 lbs/bolt.

For Longit Fp. T_{bolt} = 5568 lbs/3 bolts = 1856 lbs/bolt

Per HILTI Catalog: Tall = 3320 lbs/bolt
(attached) HSL M 12/50 80mm (3 1/4" embed)
in 4000 psi Concrete 1/2" ϕ

Per Doc. 03251-01-R 7/31/92, Rev. 0, p. 11/14
(1/2" ϕ) M12, 3 1/4" embed (attached)

Controls → { Tall = 2810 lbs 4000 psi concrete
Tall = 2390 lbs 3000 psi concrete

USE Tall = 2390 lbs/bolt $\left\{ \frac{2390}{1856} = 128\% \right.$

∴ USE 3 ~ 1/2" ϕ HSLM 12/50 80mm embed. (3 1/4")
bolts. OK.

Use manufacturer standard nuts, bolts, connectors to complete VFD Support construction.

By inspection - new units (10/1/01) weight = 350 lbs/each.

STAND is now ≈ 66" wide, bolts to floor @ 12" o.c., through angle. ⇒ SUPPORT is OK.
12 bolts. 2 rows of 6 (min)

FORM 8X8

Holmes & Narver
Architects – Engineers
6501 Americas Parkway NE Suite 700
Albuquerque, NM 87110

CHECKED DATE 10/15/01 JOB NO. 3442.053.SCAL.005
Rev. A

APPROVED DATE 10/15/01 SHEET 1 OF 17

BY DAA DATE 10-15-01

TITLE CCF VFD Free Standing Floor Mounted Support
#100256 CHILLED WATER SYSTEM OPTIMIZATION MASTER PLAN

APPENDIX

Drawing No. C52952, Sheet M14	1 page
Drawing No. C52952, Sheet M15	1 page
MagnaTek Ref. S5961 product Spec Sheets	2 pages
ABB ACH 401 Product Spec Sheet	1 page
AISC ASD 9th Edition, p. 5-135, Table C-C2.1	1 page
ASTM A 570/A570M – 96, Standard Specification for Steel	1 page
Unistrut Catalog No. 10R	5 pages
Hilti Systems and Solutions	2 pages
Hilti North America Product Technical Guide	2 pages

11

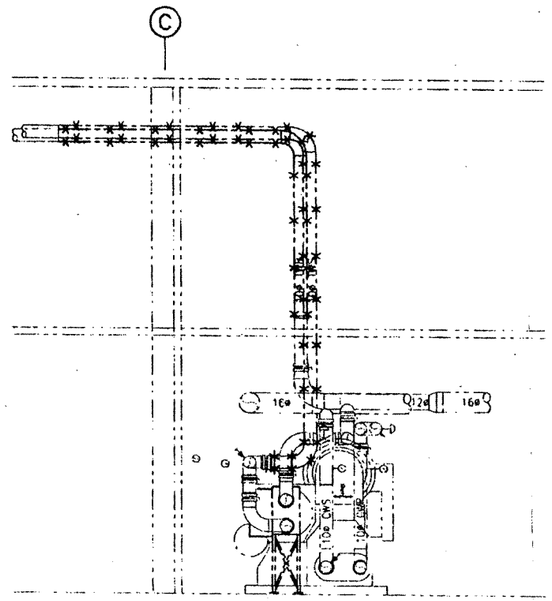

CHILLER SECTION
SCALE: 1/4"=1'-0"
A / M4

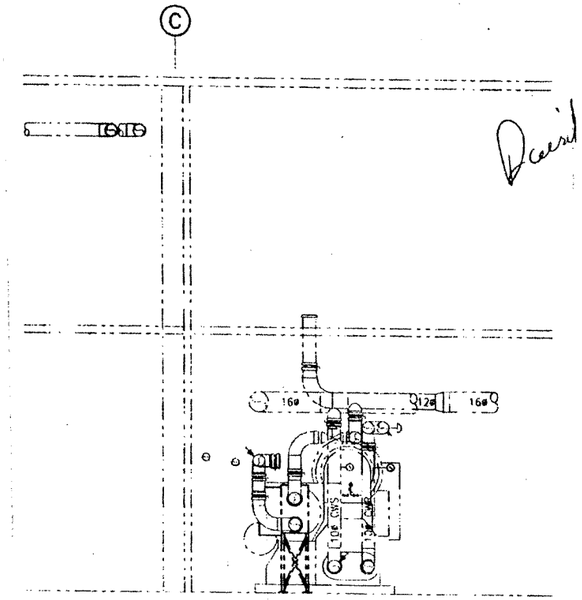

David

CHILLER SECTION
SCALE: 1/4"=1'-0"
B / M9

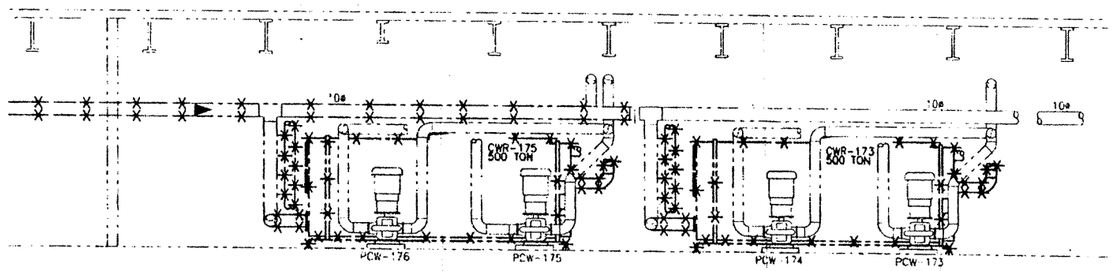

CHILLER SECTION
SCALE: 1/4"=1'-0"
C / M6

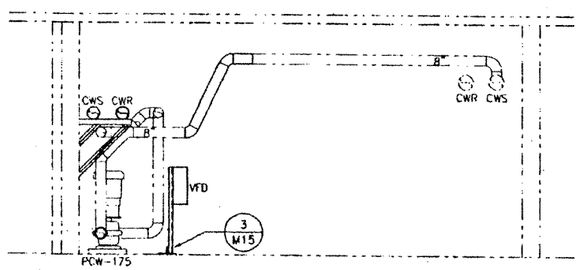

CHILLER SECTION
SCALE: 1/4"=1'-0"
D / M10

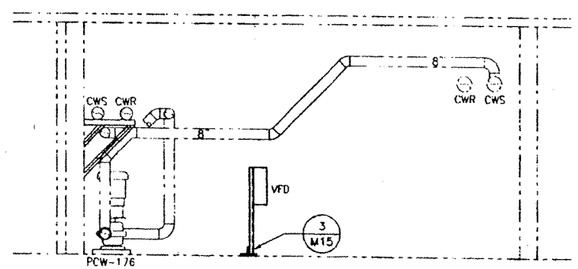

CHILLER SECTION
SCALE: 1/4"=1'-0"
E / M10

ENGINEER'S SEAL

GENERAL NOTES

1. PIPE HANGERS AND PIPE FLOOR SUPPORTS NOT SHOWN FOR CLARITY.

ADD NOTE
TO Details D, E
Floor stand supports
for piping not shown
for clarity. See
M-10 for locations.
ok Show them?
(comment from 10/9 review)

NOT FOR CONSTRUCTION

NO.	DATE	CLASS REV	REVISIONS	DRN	DES	CHKD	TECH	APP
B	10/5/01		90% "IN-HOUSE REVIEW"	RC	MS	DD		
A	9/18/01		60% "IN-HOUSE REVIEW"	RC	MS	DD		

HOLMES & NARVER/RAYTHEON (HNR)
HOLMES & NARVER/RAYTHEON ENGINEERS & CONSTRUCTORS
CRAVER-SHIVERS CONSULTING ENGINEERS
BRIDGERS & PAXTON CONSULTING ENGINEERS

CCN CHILLED WATER SYSTEM
OPTIMIZATION MASTER PLAN
MECH: SECTIONS

DRAWN R. ORCH
DESIGN M. SLAWIN
ENGRD D. DORSEY
APPR M.S.M.

BLDG. 1498 & 132 TA-3

DRAWN DANIEL DORSEY
APPROVED FOR ISSUE DOUG HEFLE

Los Alamos — Los Alamos National Laboratory, Los Alamos, New Mexico 87545

SHEET M14 OF

CUSTOMER ENGINEER

PROJECT ID 100256
DRAWING NO. C52852 REV B

Date Plotted: 10/08/01
Time Plotted: 08:35:14
Layer Name: 0
Cad File Name: 3D0202B014.dwg
Cad File Path: H:\D030JJ3R\cad\mech\

12

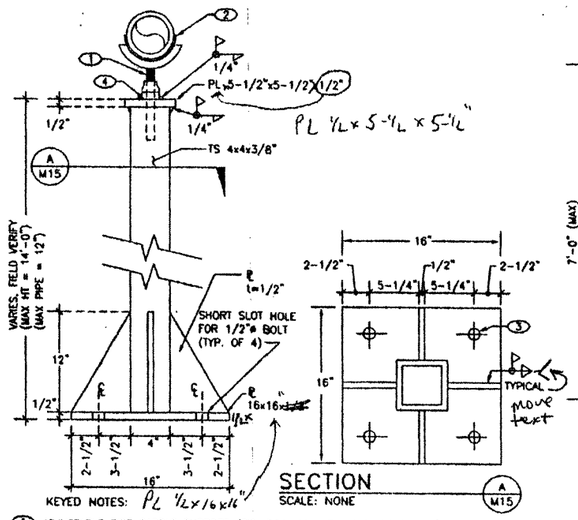

KEYED NOTES:

1. ADJUSTABLE PIPE SADDLE SUPPORT (FIG. 264, GRINNELL CATALOG PH-99). SIZE PER PIPE DIAMETER AND INSULATION THICKNESS, SPECIFIED ELSEWHERE.
2. INSULATION SHIELD. SIZE PER PIPE DIAMETER AND INSULATION THICKNESS SPECIFIED ELSEWHERE.
3. MOUNT USING HILTI HSL M 12/50 HEAVY-DUTY EXPANSION ANCHOR (ITEM NO. 00066593, HILTI 2001 CATALOG). INSTALL PER MANUFACTURERS RECOMMENDATIONS.
4. DRILL HOLE IN CENTER OF PLATE TO ALLOW VERTICAL SUPPORT MOVEMENT.

PIPE SUPPORT – FLOOR MOUNTED

SCALE: NONE (1/M10)

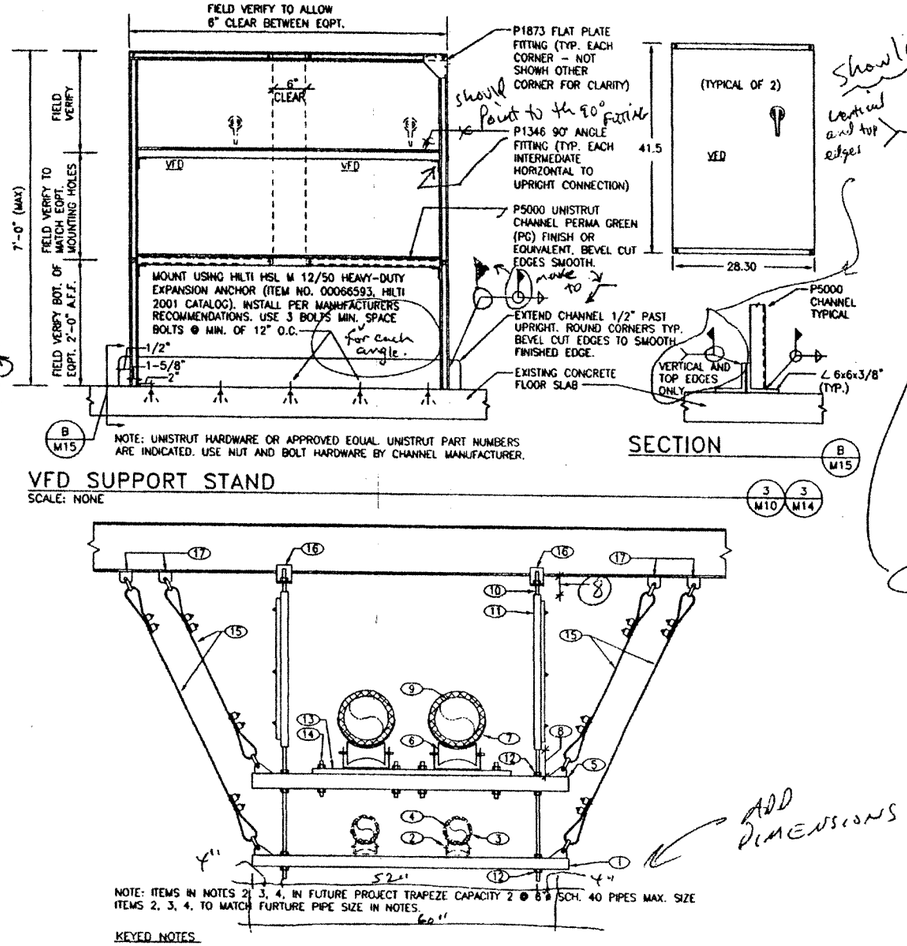

NOTE: UNISTRUT HARDWARE OR APPROVED EQUAL. UNISTRUT PART NUMBERS ARE INDICATED. USE NUT AND BOLT HARDWARE BY CHANNEL MANUFACTURER.

VFD SUPPORT STAND

SCALE: NONE (3/M10, 3/M14)

SECTION

(B/M15)

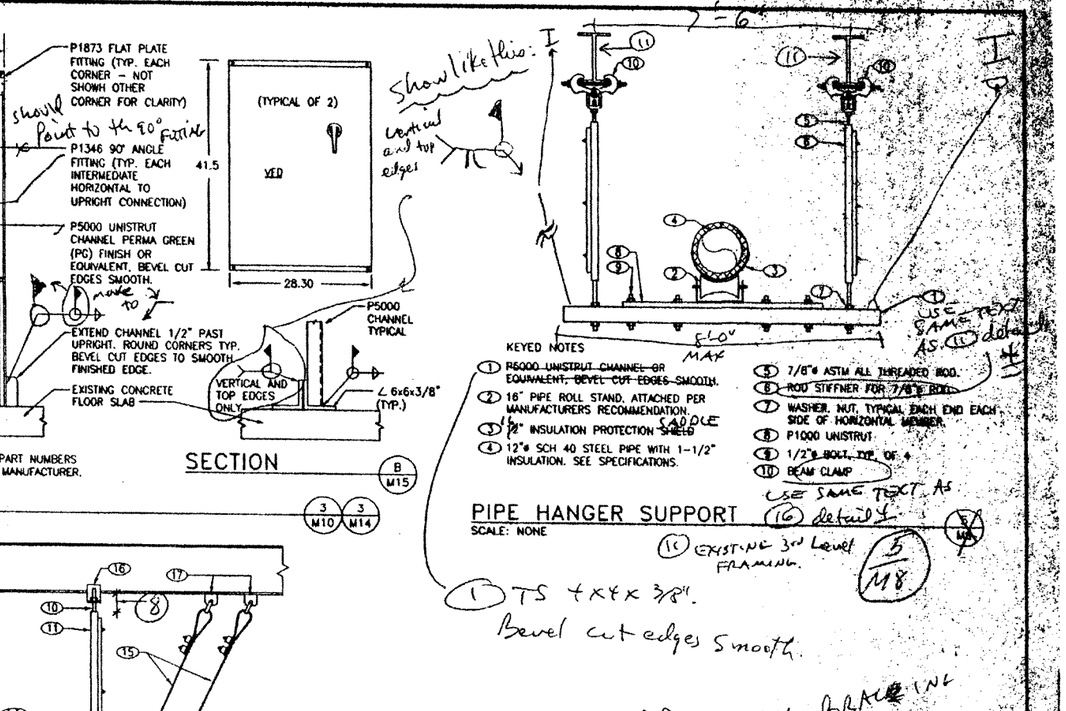

KEYED NOTES

1. P5000 UNISTRUT CHANNEL OR EQUIVALENT, BEVEL CUT EDGES SMOOTH.
2. 16" PIPE ROLL STAND, ATTACHED PER MANUFACTURERS RECOMMENDATION.
3. 1/2" INSULATION PROTECTION SHIELD SADDLE
4. 12"ø SCH 40 STEEL PIPE WITH 1-1/2" INSULATION. SEE SPECIFICATIONS.
5. 7/8"ø ASTM ALL THREADED ROD.
6. ROD STIFFNER FOR 7/8"ø ROD.
7. WASHER, NUT, TYPICAL EACH END EACH SIDE OF HORIZONTAL MEMBER.
8. P1000 UNISTRUT
9. 1/2"ø BOLT, TYP. OF 4
10. BEAM CLAMP
11. EXISTING 3rd Level FRAMING.

PIPE HANGER SUPPORT

SCALE: NONE (5/M8)

NOTE: ITEMS IN NOTES 2, 3, 4, IN FUTURE PROJECT TRAPEZE CAPACITY 2 @ 6"ø SCH. 40 PIPES MAX. SIZE ITEMS 2, 3, 4, TO MATCH FURTURE PIPE SIZE IN NOTES.

KEYED NOTES

1. P5000 UNISTRUT CHANNEL PERMA GREEN (PG) FINISH OR EQUIVALENT, BEVEL CUT EDGES SMOOTH.
2. 16" PIPE ROLL STAND. SEE GRINNELL FIG. 271, (OR APPROVED EQUAL) ATTACH PER MANUFACTURERS RECOMMENDATIONS. N.I.C. (FUTURE)
3. PROTECTION SADDLE N.I.C. (FUTURE)
4. 6"ø SCH 40 STEEL PIPE WITH 1-1/2" INSULATION. SEE SPECIFICATIONS. N.I.C. (FUTURE)
5. TS 4x4x3/8", BEVEL CUT EDGES SMOOTH.
6. 16" PIPE ROLL STAND. SEE GRINNELL FIG. 271 (OR APPROVED EQUAL). ATTACH PER MANUFACTURERS RECOMMENDATIONS.
7. 16" INSULATION PROTECTION SADDLE.
8. 6" MAXIMUM, TYPICAL
9. 12"ø SCH 40 STEEL PIPE WITH 1-1/2" INSULATION. SEE SPECIFICATIONS.
10. 7/8"ø ASTM A36 ALL THREADED ROD.
11. ROD STIFFNER FOR 7/8"ø ROD. SECURE WITH 2 BOLTS MIN., 12" O.C. MAX. (TOLCO FIG. 98 OR APPROVED EQUAL).
12. WASHER, NUT, TYPICAL EACH END EACH SIDE OF HORIZONTAL MEMBER.
13. P1000 (UNISTRUT OR APPROVED EQUAL)
14. 1/2"ø BOLT, NUT, LOCK WASHER, TYP. OF 4
15. CABLE SWAY BRACE ASSEMBLY. USE 1/4" DIA. GALVANIZED 7x19 CORE STRAND AIRCRAFT CABLE. USE CLAMPS TO FULLY DEVELOP CABLE STRENGTH. ATTACH TO TRAPEZE WITH TOLCO FIG. 982. CABLE SWAY BRACE ATTACHMENT, OR APPROVED EQUAL. THRU BOLT TO TRAPEEZE AND MECHANICALLY ATTACH TO 7/8"ø ROD USING A 1/4" THICK PLATE.
16. BEAM CLAMP, GRINNELL FIG. 292 OR APPROVED EQUAL. VERIFY SIZE OF SUPPORT BEAM FLANGE.
17. USE WELDING LUG, TOLCO FIG. 343 OR APPROVED EQUAL. CONNECT SWAY BRACE ATTACHMENT WITH 3/4" DIA. BOLT, WASHER, DOUBLE NUT.

PIPE HANGER – DOUBLE TRAPEZE

SCALE: NONE (4/M8, 4/M9)

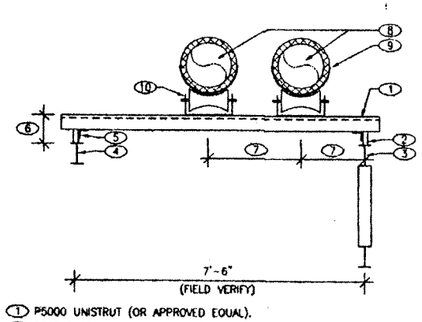

1. P5000 UNISTRUT (OR APPROVED EQUAL).
2. POST BASE P2072A UNISTRUT (OR APPROVED EQUAL), TYPICAL. ANCHOR TO SUPPORT MEMBER PER MANUFACTURERS RECOMMENDATIONS.
3. BT-4 TRUSS EXISTING. DRYWALL COVERING MEMBER, NOT SHOWN.
4. W 8x28 MEZZANINE FRAMING MEMBER. DRYWALL COVERING MEMBER, NOT SHOWN.
5. P1000 UNISTRUT POST AND P1325 90° FITTING, TYPICAL
6. ADJUST LENGTH OF P1000 UNISTRUT POST TO PROVIDE 12 INCHES FOR THIS DIMENSION.
7. FIELD VERIFY.
8. 4" DIA. SCH. 40 STEEL PIPE AND INSULATION.
9. INSULATION PROTECTION SADDLE TYPICAL.
10. PIPE ROLL STAND, GRINNELL FIG. 271 OR APPROVAL EQUAL.

SIZE AND MOUNT PER MANUFACTURERS RECOMMENDATIONS. FOR 2-4" DIA. PIPES

PIPE SUPPORT

SCALE: NONE (2/M8)

ADD SWAY BRACING to DETAIL 5 USE (4/MF) components & call outs w/ correct keynote #'s.

NOT FOR CONSTRUCTION

REV	DATE	CLASS REV	REVISIONS	DRN	DES	CHKD	SUP	APP
B	10/5/01		90% "IN-HOUSE REVIEW"	RC	MS	BD		
A	9/18/01		60% "IN-HOUSE REVIEW"	RC	MS	BD		

HOLMES & NARVER/RAYTHEON (HNR)

HOLMES & NARVER/RAYTHEON ENGINEERS & CONSULTANTS
CRAVEN-GREVEN CONSULTING ENGINEERS
BERGER & PAXTON CONSULTING ENGINEERS

CCN CHILLED WATER SYSTEM OPTIMIZATION MASTER PLAN

MECH: DETAILS

BLDG. 1498 & 132 TAC-3

SUBMITTED: DWIGHT DORSEY

APPROVED FOR RELEASE: BOBBY NEFFEL

Los Alamos — Los Alamos National Laboratory, Los Alamos, New Mexico, 87545

SHEET M15

PROJECT ID 100256

DRAWING NO. C52952 REV. B

ENGINEER'S SEAL

13

GPD 506 Byp. S/S

Dimensions

Wall Mount; NEMA 1, NEMA 12

REF: S-5361

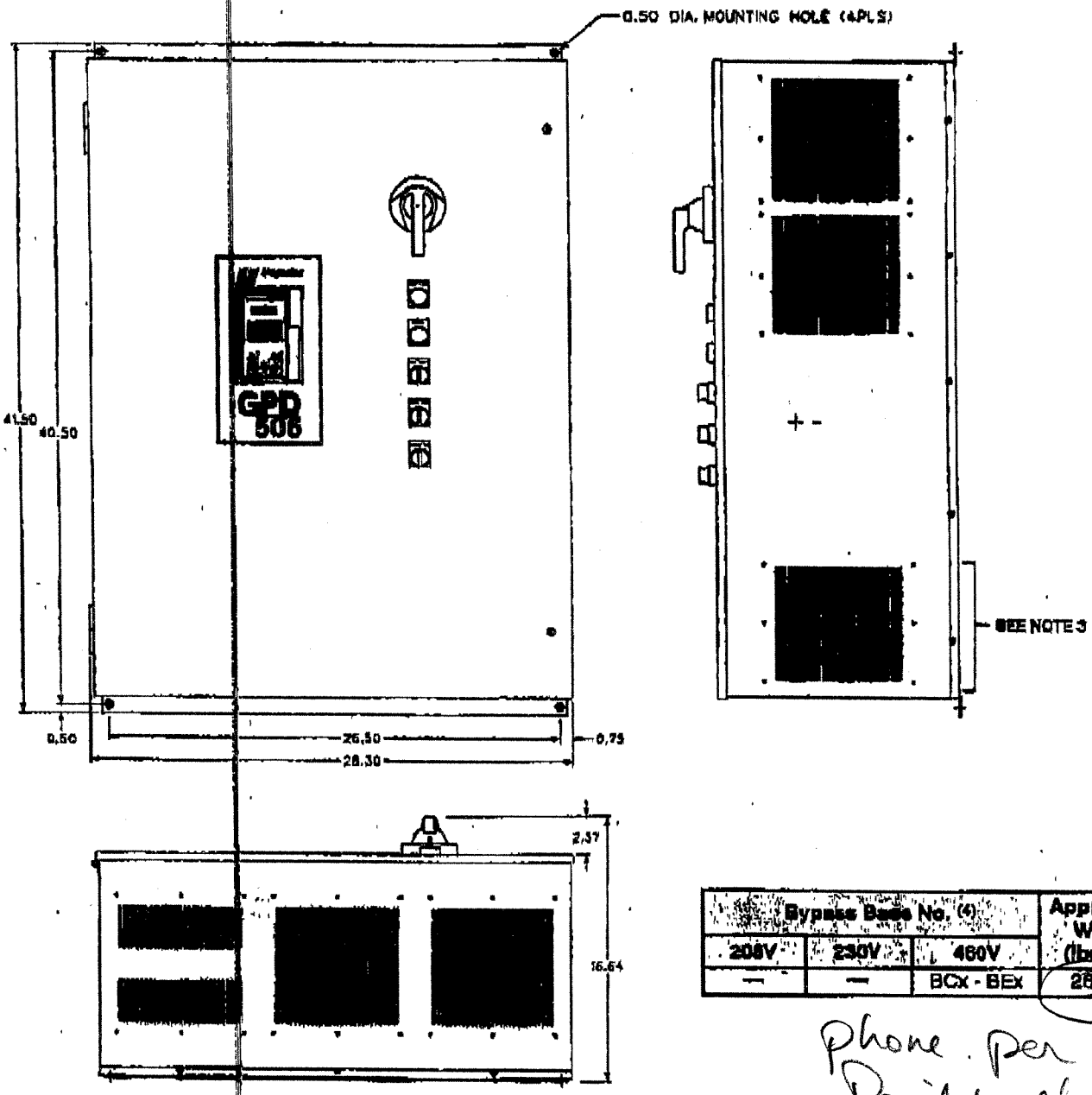

Bypass Basic No. (4)			Approx. Wt. (2) (lbs.)
208V	230V	460V	
—	—	BCx - BEx	264

Phone. per David Walker
USE 350 lbs / unit.

NOTES:

(1) In order to achieve adequate cooling, the enclosure must be positioned to allow a minimum 6" clearance below and on each side, and a minimum 2" clearance above the bypass enclosure.

(2) Enclosure and basic Bypass weight only; actual weight depends on which Bypass options are selected.

(3) For NEMA 12 enclosure (force-ventilated (blowered) and filtered), these slots will be covered.

(4) x: V = NEMA 1, B = NEMA 12.

(5) When Enclosure Hip-box is present, see drawing S-5402.

Post-it® Fax Note 7671	Date 10/1/01	# of pages ▶ 2
To David Apple	From David Walker	
Co./Dept. H+N	Co. Bridgers & Paxton	
Phone #	Phone # 883-4111	
Fax #	Fax # 888-1436	

MagneTek

Data Subject to Change Without Notice.
© Copyright 1996 MagneTek, Inc.
Current as of 08/01/99

14

Description

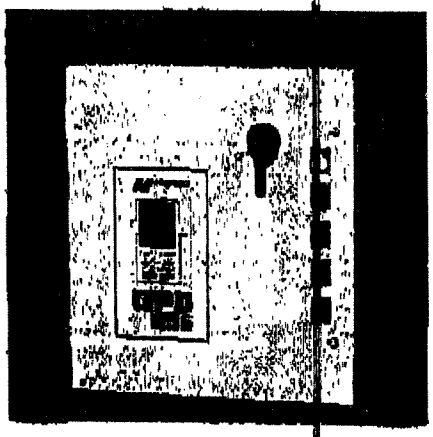

GPD 506 Bypass Drive, 1 - 500HP

The GPD 506 Bypass drive is a special configuration of the GPD 506 drive which includes the power circuits necessary to bypass the drive and operate the ac motor across-the-line, at constant speed. This configuration is ideal for applications where a redundant method of motor operation is desired, in the event the drive is shut down for servicing. The most common use is for fan and pump applications. The Bypass drive overload rating is 120% for 60 sec. This pre-engineered configuration is factory assembled into either a NEMA 1 or NEMA 12 enclosure.

Performance Features

- Ratings: 2 to 100 HP at 208 VAC, 2 to 125 HP at 230 VAC, 1 to 500 HP at 460 VAC
- Overload capacity: VT 120% for 60 sec (180% peak) CT 150% for 60 sec (200% peak)
- Starting torque: 150%
- DC injection braking: ramp or coast to stop, adjustable, current limited
- Electronic reversing
- Adjustable accel/decel: 0.1 to 3600 sec (2 each)
- Controlled speed range: 40:1
- Critical frequency rejection; 2 selectable, adjustable bands
- Torque limiting circuit: 30 to 160%
- Drive efficiency: 96 to 98%
- Energy Saving control: improves motor efficiency
- Displacement power factor: 0.98
- Output frequency: 0.1 to 400 Hz
- Frequency resolution: 0.01 Hz with digital reference, 0.06 Hz with analog reference
- Frequency regulation: 0.01% digital(-10° to 40°C), 0.1% analog (15° to 35°C)
- Torque boost: full range, auto
- Jog forward and reverse
- Power loss ride-thru: 2 sec
- Inertia ride-thru
- Selectable auto restart after momentary power loss
- Programmable auto restart (0 to 10 attempts) after resettable fault
- DC bus reactor: 30 to 125 HP at 230 VAC, 30 to 250 HP at 460 VAC
- Slip compensation

Design Features

- 32-bit microprocessor logic
- Surface mount devices
- Carrier frequency: selectable to 15 kHz
- Keypad operator controls
- LCD display: English alpha/numeric sixteen character two lines
- 24 VDC control logic
- Programmable contacts, one form C and one NO
- Timer function: contact-initiated
- RS-232 communications port
- Volts/hertz ratio: programmable custom V/Hz patterns
- Multi-speed settings: 7 available
- Remote speed reference: 0 to 10 VDC or 4 to 20 mA
- Setpoint (PID) control with inverse input
- Signal follower: bias and gain
- Analog monitor output: 0 to 10 VDC
- Circuit breaker, door-interlocked
- Magnetic contactors, Drive input & output
- Magnetic contactor, bypass
- Overload relay, class 20 thermal
- Control Transformer, fused
- Switch, "Bypass-Off-Drive"
- Switch, "Manual-Auto"
- Switch, "Test-Normal"
- Pilot light, "Power On"
- Pilot light, "Fault"
- Terminal strip for customer-wired inputs, run/stop, firestat/freezestat, damper control, and run/fault.
- Enclosure: NEMA 1 or NEMA 12
- UL, cUL and ce listed; IEC: 146A
- MTBF: exceeds 28 years

Protective Features

- Current limited stall prevention
- Synchronized start into rotating motor via speed search
- DC bus CHARGE indicator
- Optically-isolated controls
- Phase-to-phase / phase-to-neutral short circuit protection
- Ground fault protection
- Electronic motor overload
- Current and torque limit
- Fault circuit: overcurrent, overvoltage, and overtemperature
- Over torque protection
- Under torque protection

Service Conditions

- Ambient service temperature: -10°C to 40°C (104°F) NEMA 1, to 45°C (113°F) protected chassis
- Humidity: to 95% non-condensing
- Altitude: to 3300 ft; higher by derating
- Input voltage: +10%/-15%, 200 to 230 VAC, 380 to 480 VAC
- Input frequency: 50/60 Hz ± 5%
- 3-phase, 3-wire, phase sequence insensitive

Options

- Input RFI Filter
- Input Fusing
- Input Reactor
- DC Bus Reactor
- Pressure Transducer, 3-15 psi
- Smoke Purge Logic
- Auto Transfer on Drive Fault
- Other integrally mounted options
- Serial communications: RS-232C to RS-485, Johnson Controls / MetaSys, System 600 / Apogee and Echelon LonWorks

Data Subject to Change Without Notice.
© Copyright 1998 MagneTek, Inc.
Current as of 03/01/99

MagneTek

ABB

ACH 400
HVAC AC DRIVES

CANL 15
LDCC-CCF

ACH401 Electronic Bypass Dimensions NEMA Type 1, Frame R1 - R4

VAC DRIVES
2 UNITS ON
FLOOR MOUNTED
FREESTANDING
CRANE.

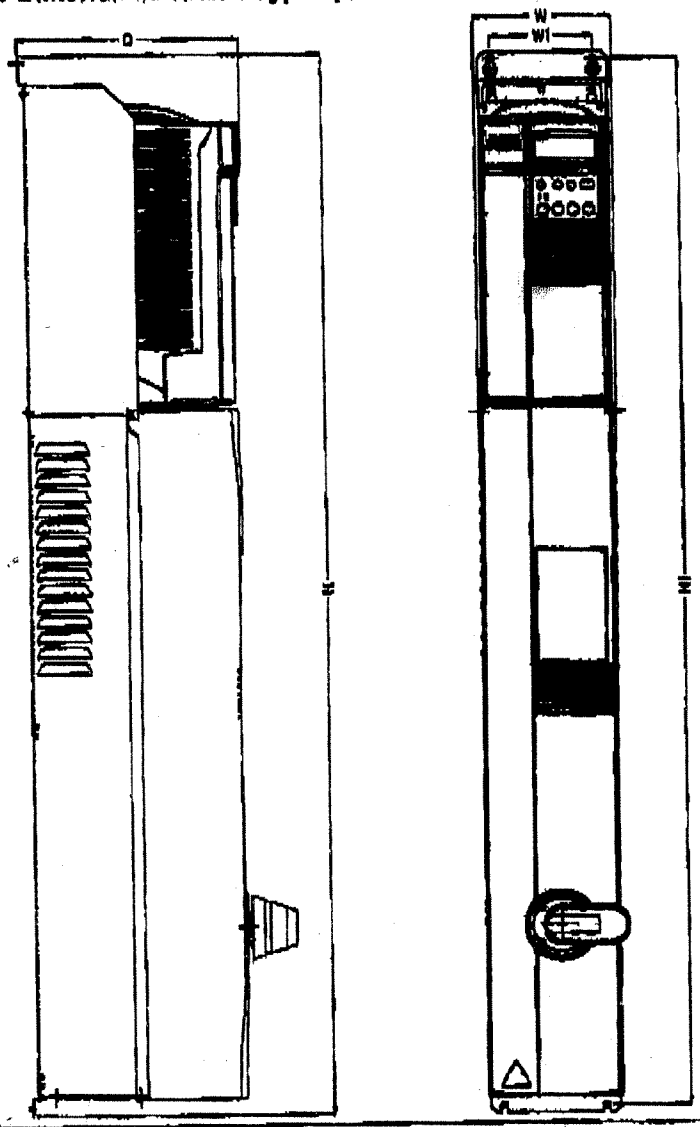

Post-it® Fax Note 7671	
To David Apple	Date 9/24/01 # of pages ▶ 1
Co./Dept. N+N	From David Walker
Phone #	Co. B&P
Fax #	Phone # 892-8041
	Fax #

50 HP

Dimensions Reference (in/mm)	Frame Size, IP21/NEMA 1			
	R1	R2	R3	R4
W	5.28/134	5.28/134	8.66/220	8.66/220
W1	3.96/101	3.96/101	6.34/161	6.34/161
H	42.21/1072	46.14/1172	53.03/1347	56.58/1437
H1	41.68/1059	45.62/1159	52.47/1133	56.01/1423
D	10.28/261	10.20/259	1176/299	11.76/299
Mass (lb/kg)	34/15	41/19	107/49	126/57

Alt.
265# EW use 350#
28-3 wide
1.5 ht.
depth 16½"
6" clr. 60 side

abb ach400

the top of the column. On the other hand, the restraining influence of foundations, even where these footings are designed only for vertical load, can be very substantial in the case of flat-ended column base details with ordinary anchorage (Galambos, 1960). For this condition, a design K-value of 1.5 would generally be conservative in Case f.

While in some cases the existence of masonry walls provides enough lateral support for their building frames to control lateral deflection, the increasing use of light curtain wall construction and wide column spacing for high-rise structures not provided with a positive system of diagonal bracing can create a situation where only the bending stiffness of the frame itself provides this support.

Table C-C2.1

	(a)	(b)	(c)	(d)	(e)	(f)
Buckled shape of column is shown by dashed line	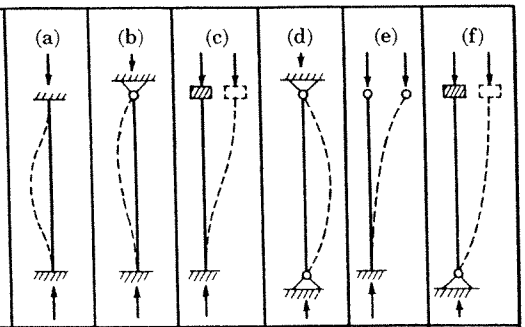					
Theoretical K value	0.5	0.7	1.0	1.0	2.0	2.0
Recommended design value when ideal conditions are approximated	0.65	0.80	1.2	1.0	2.10	2.0
End condition code	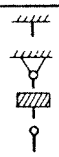	Rotation fixed and translation fixed Rotation free and translation fixed Rotation fixed and translation free Rotation free and translation free				

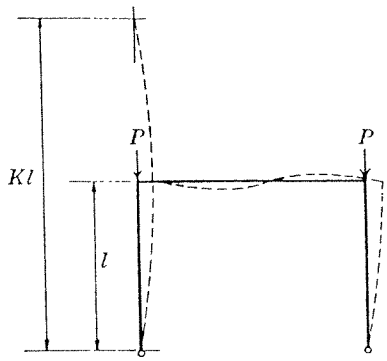

Figure C-C2.1

17

Designation: A 570/A 570M - 96

Standard Specification for Steel, Sheet and Strip, Carbon, Hot-Rolled, Structural Quality[1]

This standard is issued under the fixed designation A 570/A 570M; the number immediately following the designation indicates the year of original adoption or, in the case of revision, the year of last revision. A number in parentheses indicates the year of last reapproval. A superscript epsilon (ε) indicates an editorial change since the last revision or reapproval.

This specification has been approved for use by agencies of the Department of Defense. Consult the DoD Index of Specifications and Standards for the specific year of issue which has been adopted by the Department of Defense.

1. Scope

1.1 This specification covers hot-rolled carbon steel sheet and strip of structural quality in cut lengths or coils. This material is intended for structural purposes where mechanical test values are required, and is available in a maximum thickness of 0.229 in. [6.0 mm] except as limited by Specification A 568/A 568M and A 749/A 749M. The maximum thickness may be further limited by the capacity of the composition to meet the specified mechanical property requirements.

1.1.1 The following grades are covered in this specification:

UNISTRUT P1000

Grade	Mechanical Properties Yield Point, min, ksi [MPa]	Tensile Strength, min, ksi [MPa]
30	30 [205]	49 [340]
33	33 [230]	52 [360]
36	36 [250]	53 [365]
40	40 [275]	55 [380]
45	45 [310]	60 [415]
50	50 [345]	65 [450]
55	55 [380]	70 [480]

1.2 The values stated in either U.S. inch-pound units or SI (metric) units are to be regarded separately as standard. Within the text the SI units are shown in brackets. The values stated in each system are not exact equivalents, therefore each system must be used independently of the other. Combining values of the two systems may result in nonconformance with the specification.

2. Referenced Documents

2.1 *ASTM Standards:*

A 568/A 568M Specification for Steel, Sheet, Carbon and High-Strength, Low-Alloy, Hot-Rolled and Cold-Rolled, General Requirements for[2]

A 749/A 749M Specification for Steel, Strip, Carbon and High-Strength, Low-Alloy, Hot-Rolled, General Requirements for[2]

3. General Requirements for Delivery

3.1 Material furnished under this specification shall conform to the applicable requirements of the current edition of Specification A 568/A 568M and A 749/A 749M unless otherwise provided herein.

4. Ordering Information

4.1 Orders for material under this specification shall include the following information, as required, to describe the required material adequately:

4.1.1 ASTM specification number and date of issue, and grade,

4.1.2 Copper-bearing steel (if required),

4.1.3 Special requirements (if required),

4.1.4 Name of material (hot-rolled sheets or strip),

4.1.5 Condition—Material to this specification is furnished in the hot-rolled condition. Pickled (or blast cleaned) should be specified if required. Material so ordered will be oiled unless ordered dry, and

4.1.6 Dimensions, including type of edges.

4.1.6.1 As agreed upon between the purchaser and the producer, material ordered to this specification will be supplied to meet the appropriate standard or restricted thickness tolerance table shown in Specification A 568/A 568M.

NOTE 1—Not all producers are capable of meeting all of the limitations of the thickness tolerance tables in Specification A 568/A 568M. The purchaser should contact the producer regarding possible limitations prior to placing an order.

4.1.7 Coil size requirements, and

4.1.8 Cast or heat (formerly ladle) analysis or test report (request, if required).

NOTE 2—A typical ordering description is as follows: ASTM A 570—19XX, Grade 36, Hot-Rolled Sheets, 0.075 by 36 cut edge by 96 in. or ASTM A 570M—19XX, Grade 36, Hot-Rolled Sheets, 1.85 by 900 cut edge by 2450 mm).

5. Chemical Composition

5.1 The cast or heat analysis of the steel shall conform to the requirements prescribed in Table 1.

5.1.1 Unspecified elements may be present. Limits on elements shall be as stated in Table 2.

5.1.1.1 Each of the elements listed in Table 2 shall be

TABLE 1 Chemical Requirements

Element	Composition, %	
	Grades 30, 33, 36, and 40	Grades 45, 50, and 55
Carbon, max	0.25	0.25
Manganese, max	0.90	1.35
Phosphorus, max	0.035	0.035
Sulfur, max	0.04	0.04
Copper, when copper is specified, min	0.20	0.20

[1] This specification is under the jurisdiction of ASTM Committee A-1 on Steel, Stainless Steel and Related Alloys, and is the direct responsibility of Subcommittee A01.19 on Steel Sheet and Strip.

Current edition approved Sept. 10, 1996. Published November 1996. Originally published as A 570 - 66 T. Last previous edition A 570 - 95.

[2] *Annual Book of ASTM Standards*, Vol 01.03.

UNITED STATES

UNISTRUT®

GENERAL ENGINEERING CATALOG

UNISTRUT ALL PURPOSE METAL FRAMING

UNISTRUT
NEW MEXICO
P.O. Box 3128 — Zip Code 87190
4820 Pan American Hwy., N.E.
Albuquerque, N.M. 87109
Phone: (505) 881-0264

NO. 10 R

P 5000™ CHANNEL AND COMBINATIONS 19

1⅝" UNISTRUT CHANNEL WIDTH SERIES

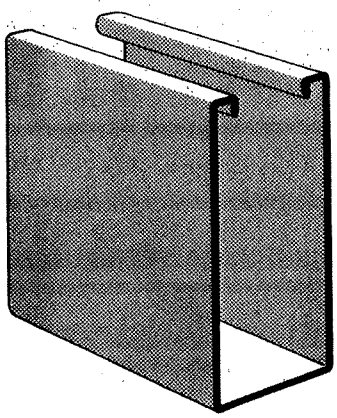

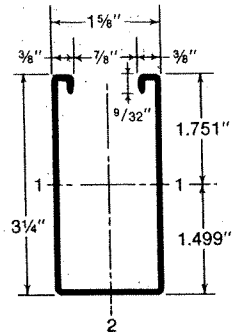

WT. LBS./C FT. 305

P 5000 channel and combinations are roll formed from 12 gauge (.105") strip steel.

Standard lengths 10 and 20 feet.

P 5000 CHANNEL

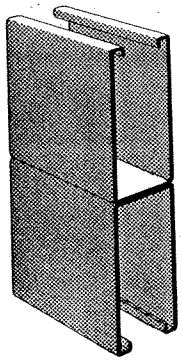

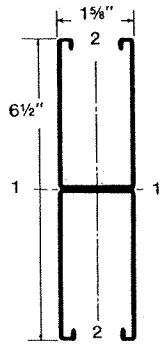

WT. LBS./C FT. 610

P 5001

BEAM LOADS

Allowable uniformly distributed loads are listed for various simple spans, that is, beam on two supports. If load is concentrated at center of span, multiply load from table by 0.5 and corresponding deflection by 0.8.

Stress 20,000 #/sq. in — Recommended for use where deflection is not a factor on long spans.
Deflection 1/240 span — Recommended for use when deflection is a factor.

COLUMN LOADS

Column loadings are for allowable axial loads for the unsupported heights listed and include a K value of 0.80. For other K values see page 112. If loads are eccentric, loads should be reduced according to standard practice.

ELEMENTS OF SECTION

CHANNEL	WT./FT. LBS.	AREA OF SECTION SQ. IN.	AXIS 1-1 I In.⁴	AXIS 1-1 S In.³	AXIS 1-1 r In.	AXIS 2-2 I In.⁴	AXIS 2-2 S In.³	AXIS 2-2 r In.
P 5000	3.05	.896	1.094	.625	1.105	.436	.537	.697
P 5001	6.10	1.792	6.215	1.912	1.862	.872	1.074	.697

I — Moment of Inertia S — Section Modulus r — Radius of Gyration

P 5000™ CHANNEL AND COMBINATIONS 20

1⅝" UNISTRUT CHANNEL WIDTH SERIES

NOTE: "Long span deep beams should be supported in a manner to prevent rotation at supports and tied between supports to prevent twist."

BEAM AND COLUMN DATA

BEAM SPAN OR UNBRACED HEIGHT	CHANNEL	UNIFORM LOAD @ 20000 PSI	DEFLECTION @ 20000 PSI	UNIFORM LOAD @ DEFLECTION = 1/240 SPAN	MAX. LOAD OF COLUMN LOADED @ C.G.	MAX. LOAD OF COLUMN LOADED @ SLOT FACE
24"	P5000	4160	.02	—	8400	4900
	P5001	4880*	.01	—	18200	9000
36"	P5000	2780	.05	—	7500	4800
	P5001	4880*	.02	—	17900	8900
48"	P5000	2080	.09	—	6300	4100
	P5001	4880*	.04	—	17500	8700
60"	P5000	1670	.15	—	5000	2800
	P5001	4880*	.08	—	17000	8500
72"	P5000	1390	.21	—	3800	2100
	P5001	4250	.11	—	16300	8300
84"	P5000	1190	.28	—	3100	1700
	P5001	3640	.15	—	15600	7800
96"	P5000	1040	.37	—	2600	1500
	P5001	3180	.20	—	14700	7200
108"	P5000	920	.47	880	2200	1300
	P5001	2830	.25	—	13700	6600
120"	P5000	830	.58	720	2000	1100
	P5001	2550	.31	—	12500	5800

*LOAD LIMITED BY SPOT WELD SHEAR

BEAM SPAN	CHANNEL	UNIFORM LOAD @ 20000 PSI	DEFLECTION @ 20000 PSI	UNIFORM LOAD @ DEFLECTION = 1/240 SPAN
12'-0"	P5000	690	.84	500
	P5001	2120	.45	—
14'-0"	P5000	590	1.14	370
	P5001	1820	.61	2080
16'-0"	P5000	520	1.49	280
	P5001	1600	.80	1600
18'-0"	P5000	460	1.88	220
	P5001	1410	1.01	1260
20'-0"	P5000	410	2.30	180
	P5001	1270	1.25	1020

STRENGTH OF P 3010 NUTS USED IN P 5000 CHANNEL

Resistance to Slip — 1500 Lbs. per bolt
Pull Out Strength — 2000 Lbs. per bolt
Minimum Safety Factor of 3

FLAT PLATE FITTINGS

1⅝" UNISTRUT CHANNEL WIDTH SERIES

21

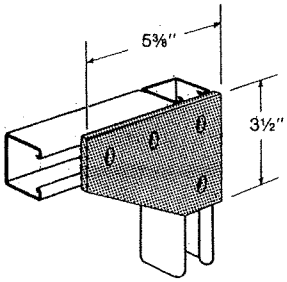

WT. LBS./C 105

P 1380

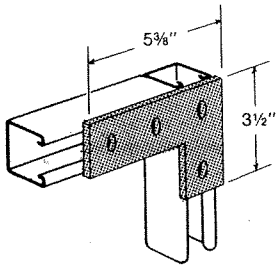

WT. LBS./C 80

P 1380 A

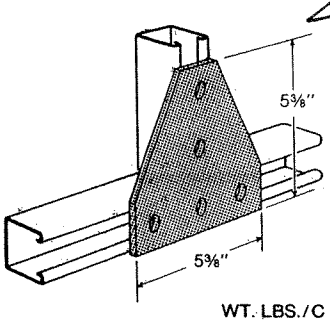

WT. LBS./C 148

P 1726

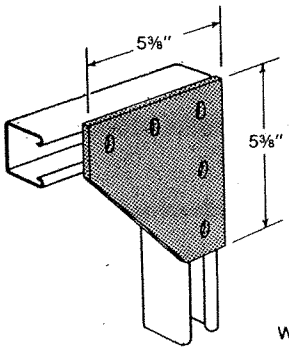

WT. LBS./C 150

P 1873

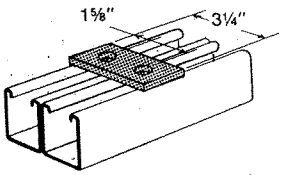

WT. LBS./C 35

P 1924

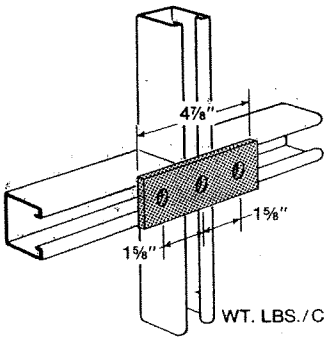

WT. LBS./C 50

P 1925

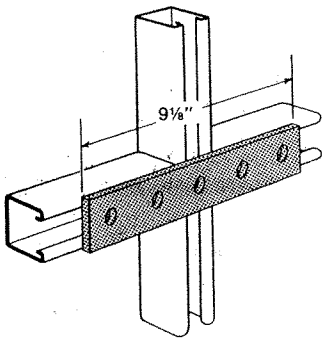

WT. LBS./C 94

P 1941

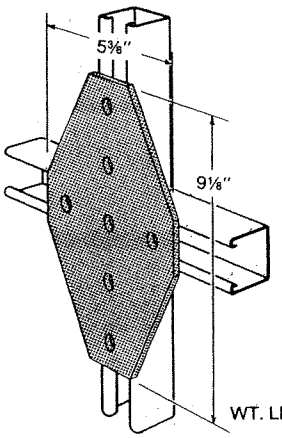

WT. LBS./C 240

P 1950

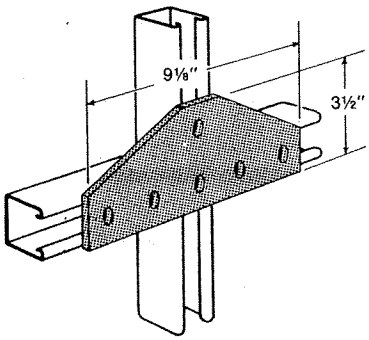

WT. LBS./C 176

P 1953

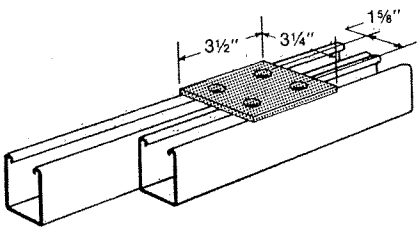

WT. LBS./C 73

P 2079

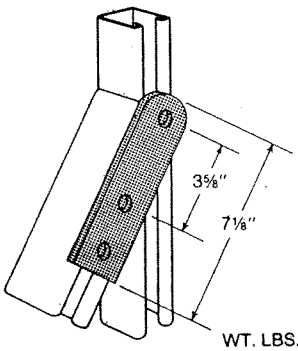

WT. LBS./C 75

P 2324

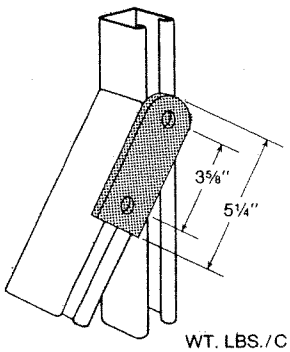

WT. LBS./C 55

P 2325

HOLE SIZE	9/16" DIAMETER	WIDTH	1-5/8"
HOLE SPACING	13/16" FROM END 1-7/8" ON CENTER	THICKNESS	1/4"

NINETY DEGREE ANGLE FITTINGS

1⅝" UNISTRUT CHANNEL WIDTH SERIES

22

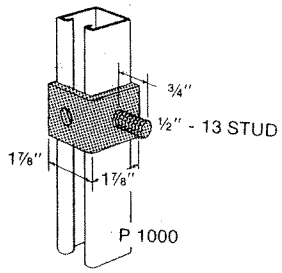

WT. LBS./C 45

P 1315

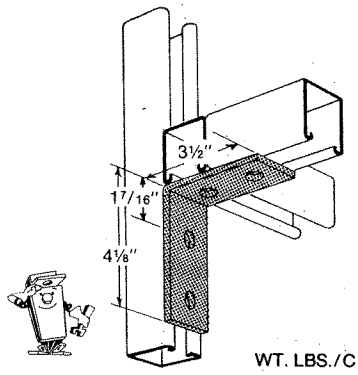

WT. LBS./C 78

P 1325

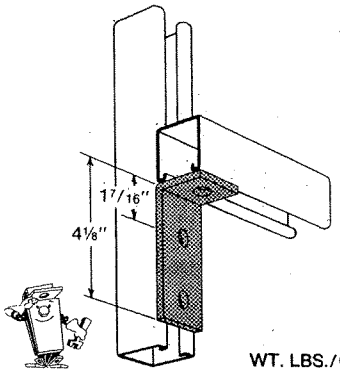

WT. LBS./C 58

P 1326

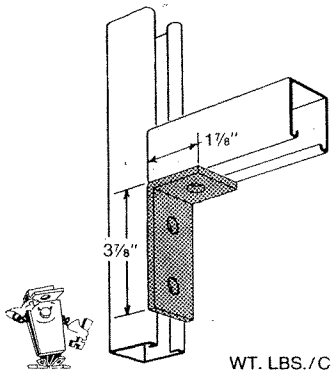

WT. LBS./C 58

P 1346

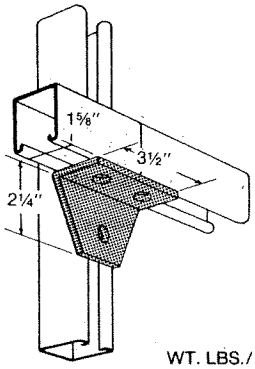

WT. LBS./C 70

P 1357

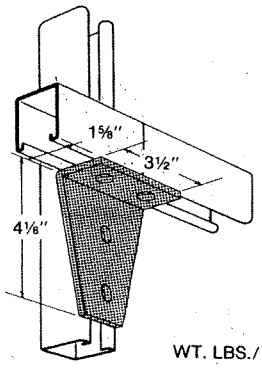

WT. LBS./C 105

P 1359

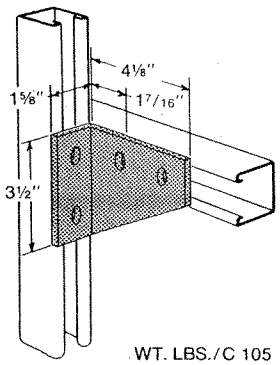

WT. LBS./C 105

P 1381

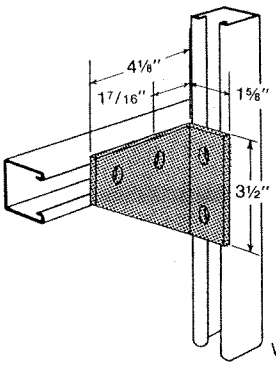

WT. LBS./C 105

P 1382

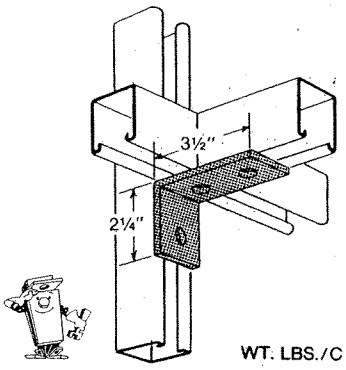

WT. LBS./C 58

P 1458

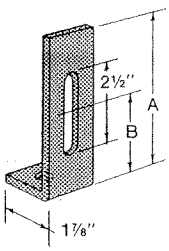

	A	B	WT. LBS./C
P 1498	4⅞"	2½"	65
P 1499	6⅞"	4½"	85

P 1498 & P 1499

	A	WT. LBS./C
P 1538A	3⅞"	61
P 1538B	5⅞"	84
P 1538C	7⅞"	107
P 1538D	9⅞"	130

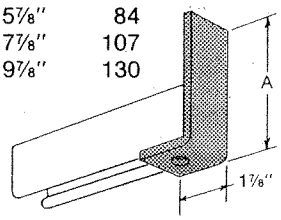

P 1538 A — P 1538 D

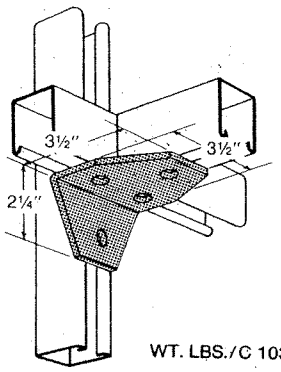

WT. LBS./C 103

P 1579

HOLE SIZE	9/16" DIAMETER	WIDTH	1-5/8"
HOLE SPACING	13/16" FROM END 1-7/8" ON CENTER	THICKNESS	1/4"

HILTI

expertise. in every case.

Hilti Sales and Service
Queen,Brent P, Team Southwest
PO Box 21148
Tulsa OK 74121
800-879-8000 www.us.hilti.com
Cat -1, Tech -1, Credit 0, Fire 0, CD Fire 0

APPLE

Ship to:
DAVID APPLE
HOLMES & NARVER
6501 AMERICAS PKWY NE
SUITE 700
ALBUQUERQUE NM 87059

Systems and Solutions

1-800-879-8000
www.us.hilti.com

HSL (Bolt Version)

Item No	Description	Bit dia (mm)	Anchor Length (mm)	Minimum Embedment Depth (mm)	Average Ultimate Loads in 4000 psi Concrete Tension (lb)	Average Ultimate Loads in 4000 psi Concrete Shear (lb)	Allowable Working Loads 4000 psi Concrete Tension (lb)	Allowable Working Loads 4000 psi Concrete Shear (lb)	Qty Box	Stock Status
00066573	HSL M 8/20	12	95	65	5870	8345	1680	2390	40	–
00066575	HSL M 8/40	12	115	65	5870	8345	1680	2390	40	C
00066576	HSL M 10/20	15	107	75	8500	13220	2435	3790	20	–
00066578	HSL M 10/40	15	127	75	8500	13220	2435	3790	20	–
00066592	HSL M 12/25	18	120	80	11240	18900	3220	5420	20	–
00066593	HSL M 12/50	18	145	80	11240	18900	3220	5420	20	–
00066594	HSL M 16/25	24	148	105	20205	33640	5790	9645	10	R
00066595	HSL M 16/50	24	173	105	20205	33640	5790	9645	10	–
00066596	HSL M 20/30	28	183	130	25500	45020	7310	12905	6	–
00066597	HSL M 20/60	28	213	130	25500	45020	7310	12905	6	C
00260383	HSL M 24/30	32	205	155	34390	62615	9860	17950	4	C
00260384	HSL M 24/60	32	235	155	34390	62615	9860	17950	4	R

HSLB Torque Cap

Item No	Description	Bit dia (mm)	Anchor Length (mm)	Minimum Embedment Depth (mm)	Average Ultimate Loads in 4000 psi Concrete Tension (lb)	Average Ultimate Loads in 4000 psi Concrete Shear (lb)	Allowable Working Loads 4000 psi Concrete Tension (lb)	Allowable Working Loads 4000 psi Concrete Shear (lb)	Qty Box	Stock Status
00045706	HSLB M 12/6	18	–	80	11240	18900	3220	5420	20	R
00067400	HSLB M 12/25	18	120	80	11240	18900	3220	5420	20	–
00067401	HSLB M 12/50	18	145	80	11240	18900	3220	5420	20	C
00045707	HSLB M 16/6	24	–	80	20205	33640	5790	9654	10	C
00067402	HSLB M 16/25	24	148	105	20205	33640	5790	9654	10	C
00067403	HSLB M 16/50	24	173	105	20205	33640	5790	9654	10	C
00067404	HSLB M 20/30	28	183	130	25500	45020	7310	12905	6	C
00067405	HSLB M 20/60	28	213	130	25500	45020	7310	12905	6	C
00260385	HSLB M 24/30	32	205	155	34390	62615	9860	17950	4	C
00260386	HSLB M 24/60	32	235	155	34390	62615	9860	17950	4	C

HSLG-N Stud Anchor

Item No	Description	Bit dia (mm)	Anchor Length (mm)	Minimum Embedment Depth (mm)	Average Ultimate Loads in 4000 psi Concrete Tension (lb)	Average Ultimate Loads in 4000 psi Concrete Shear (lb)	Allowable Working Loads 4000 psi Concrete Tension (lb)	Allowable Working Loads 4000 psi Concrete Shear (lb)	Qty Box	Stock Status
00068411	HSLG-N 8/20	12	95	65	5870	6845	1680	1965	40	C
00068425	HSLG-N 10/20	15	107	75	8500	10840	2435	3110	20	C
00068439	HSLG-N 12/25	18	120	80	11240	15500	3220	4445	20	C
00068440	HSLG-N 12/50	18	145	80	11240	15500	3220	4445	20	C
00068452	HSLG-N 16/25	24	148	105	20205	27585	5790	7910	10	R
00068453	HSLG-N 16/50	24	173	105	20205	27585	5790	7910	10	C
00068465	HSLG-N 20/30	28	183	130	25500	36915	7310	10585	6	C
00068467	HSLG-N 20/60	28	213	130	25500	36915	7310	10585	6	C

HSLG-R Stainless Steel Stud Anchor

Item No	Description	Bit dia (mm)	Anchor Length (mm)	Minimum Embedment Depth (mm)	Average Ultimate Loads in 4000 psi Concrete Tension (lb)	Average Ultimate Loads in 4000 psi Concrete Shear (lb)	Allowable Working Loads 4000 psi Concrete Tension (lb)	Allowable Working Loads 4000 psi Concrete Shear (lb)	Qty Box	Stock Status
00067922	HSLG-R M 10/20	15	107	75	8985	12410	2575	3560	20	C
00067924	HSLG-R M 12/25	18	120	80	10835	18300	3105	5245	20	C
00067926	HSLG-R M 16/25	24	148	105	19005	35320	5450	10125	10	C
00067928	HSLG-R M 20/30	28	183	130	28520	50540	8175	14490	6	C

HSL-I Flush Anchor (Internally Threaded; 12mm Diameter)

Item No	Description	Bit dia (mm)	Anchor Length (mm)	Minimum Embedment Depth (mm)	Average Ultimate Loads in 4000 psi Concrete Tension (lb)	Average Ultimate Loads in 4000 psi Concrete Shear (lb)	Allowable Working Loads 4000 psi Concrete Tension (lb)	Allowable Working Loads 4000 psi Concrete Shear (lb)	Qty Box	Stock Status
00217174	HSL-I M12 TN	18	150	80	11240	9450	3220	2710	20	C

12mm Metric Flush Anchor with Torque Nut

TYPICAL DELIVERY TIMES

– Product available from nearest DC, next day delivery.
R Product will be shipped from regional DC, allow 2-3 days for delivery.
C Product only stocked in Central Warehouse, allow 3-6 days for delivery.

Hilti North America Product Technical Guide

APPLE
25

2001 EDITION

HILTI

expertise. in every case.

HSL Heavy Duty Sleeve Anchor

Carbon Steel HSL, HSLG, HSL-I Metric Ultimate Loads in Concrete [1,2]

Anchor Diameter	Embedment Depth mm (in.)	13.8 MPa (2000 psi)		20.7 MPa (3000 psi)		27.6 MPa (4000 psi)		34.5 MPa (5000 psi)		41.4 MPa (6000 psi)	
		Tension kN (lb)	Shear kN (lb)	Tension kN (lb)	Shear kN (lb)	Tension kN (lb)	Shear kN (lb)	Tension kN (lb)	Shear kN (lb)	Tension kN (lb)	Shear kN (lb)
M8	**65** (2 9/16)	**19.8** (4460)	**29.8** (6700)	**23.0** (5165)	**33.5** (7520)	**26.1** (5870)	**37.1** (8345)	**29.1** (6545)	**38.3** (8610)	**32.1** (7220)	**39.5** (8880)
M10	**75** (3)	**27.0** (6070)	**52.2** (11745)	**32.4** (7285)	**55.5** (12480)	**37.8** (8500)	**58.8** (13220)	**43.1** (9700)	**62.1** (13960)	**48.5** (10900)	**65.4** (14700)
M12	**80** (3 3/16)	**35.1** (7880)	**72.3** (16245)	**42.5** (9560)	**78.2** (17570)	**50.0** (11240)	**84.1** (18900)	**57.5** (12920)	**90.7** (20390)	**64.9** (14600)	**97.3** (21875)
M16	**105** (4 1/8)	**65.4** (14700)	**125.2** (28135)	**77.6** (17450)	**137.4** (30890)	**90.1** (20205)	**149.6** (33640)	**102.1** (22960)	**161.9** (36390)	**114.4** (25710)	**174.1** (39140)
M20	**130** (5 1/8)	**91.6** (20600)	**146.8** (33000)	**102.5** (23050)	**173.5** (39010)	**113.4** (25500)	**200.3** (45020)	**124.4** (27975)	**214.0** (48110)	**135.5** (30450)	**227.7** (51195)
M24	**155** (6 1/8)	**104.5** (23500)	**213.5** (48000)	**128.8** (28945)	**246.0** (55310)	**153.0** (34390)	**278.5** (62615)	**177.2** (39835)	**306.0** (68790)	**201.4** (45280)	**333.5** (74965)

Carbon Steel HSL, HSLG, HSL-I Metric Allowable Loads in Concrete [1,2]

Anchor Diameter	Embedment Depth mm (in.)	13.8 MPa (2000 psi)		20.7 MPa (3000 psi)		27.6 MPa (4000 psi)		34.5 MPa (5000 psi)		41.4 MPa (6000 psi)	
		Tension kN (lb)	Shear kN (lb)	Tension kN (lb)	Shear kN (lb)	Tension kN (lb)	Shear kN (lb)	Tension kN (lb)	Shear kN (lb)	Tension kN (lb)	Shear kN (lb)
M8	**65** (2 9/16)	**5.7** (1280)	**8.5** (1920)	**6.6** (1480)	**9.6** (2155)	**7.5** (1680)	**10.6** (2390)	**8.3** (1875)	**11.0** (2470)	**9.2** (2070)	**11.3** (2545)
M10	**75** (3)	**7.7** (1740)	**15.0** (3365)	**9.3** (2090)	**15.9** (3580)	**10.8** (2435)	**16.9** (3790)	**12.4** (2780)	**17.8** (4000)	**13.9** (3125)	**18.8** (4215)
M12	**80** (3 3/16)	**10.1** (2260)	**20.7** (4655)	**12.2** (2740)	**22.4** (5040)	**14.3** (3220)	**24.1** (5420)	**16.5** (3700)	**26.0** (5845)	**18.6** (4185)	**27.9** (6270)
M16	**105** (4 1/8)	**18.8** (4215)	**35.9** (8065)	**22.2** (5000)	**39.4** (8855)	**25.8** (5790)	**42.9** (9645)	**29.3** (6580)	**46.4** (10430)	**32.8** (7370)	**49.9** (11220)
M20	**130** (5 1/8)	**26.3** (5905)	**42.1** (9460)	**29.4** (6610)	**49.7** (11180)	**32.5** (7310)	**57.4** (12905)	**35.7** (8020)	**61.3** (13790)	**38.8** (8730)	**65.3** (14675)
M24	**155** (6 1/8)	**30.0** (6735)	**61.2** (13760)	**36.9** (8300)	**70.5** (15855)	**43.9** (9860)	**79.8** (17950)	**50.8** (11420)	**87.7** (19720)	**57.7** (12980)	**95.6** (21490)

1. For HSL-G, reduce the tabulated shear loads by 18% to account for shear plane acting through the threaded rods vs. unthreaded bolt.
2. For HSL-I, reduce the shear loads by 50%.

Note: Definition of Nomenclature

no letter – carbon steel
R – stainless steel
N – slot at rod end

Heavy Duty Expansion Anchor

HSLG-R M 12/25

Metric Thread size (mm): not hole diameter (see Specification Table on previous page)

Maximum fastened thickness (mm)

no letter – bolt
B – torque cap
G – stud
I – Internally threaded, flush mounted

Example: HSLG-RM12/25
This is an HSL stud anchor. The anchor material is type 316 Stainless Steel. The thread size is 12 mm and this anchor can attach up to a 25 mm thick plate.