HNR

STRUCTURAL CALCULATION COVER SHEET

Date: 10-16-01

1 of 19

Calculation No:3442.053.SCAL.007,
Calculation Title: LDCC & CCF FLOOR MOUNTED PIPE SUPPORT
Project ID # 100256
Project Title: CCN CHILLED WATER SYSTEM OPTIMIZATION MASTER PLAN

ORIGINAL AND REVISED CALCULATION/ANALYSIS APPROVAL

	Rev. A Name/Signature/Date	Rev. 0 Name/Signature/Date	Rev._ Name/Signature/Date
Originator: DAVID APPLE	10/16/01	8-28-02	
Checked By: JIM WEEKS	10/16/01	8.29.02	
Approved By: JIM WEEKS	10/16/01	8.29.02	
Other:			

AFFECTED DOCUMENTS

Document Number	Document Title	Rev. Number
Drawing No. C52952	CCN Chilled Water System Optimization Master Plan	T1, M1-M33 Rev. B E1-E14 Rev. A
Drawing No. C52952	CCF/LDCC Cooling Plant Modifications	Rev.0
Drawing No. C53116	LDCC EC-1 Modifications	Rev.0

Record of Revision

Rev.	Reason for Revision
REV A	FIRST SUBMITTAL OF CALCULATIONS
Rev. 0	All pages of this calculation 3442.053.SCAL.007 Rev. A are considered Rev. 0, approved and released based upon no technical changes to the calculation during/after review.

HNR
Holmes & Narver | Raytheon

CALCULATION CHECKLIST

Task/Project #: 100256
Task Order 053
CCN CHILLED WATER SYSTEM OPTIMIZATION MASTER PLAN

Calculation Number: 3442.053.SCAL.007 2 of 19 | Revision A

Reviewer/Checker : JIM WEEKS

Reviewer performed or supervised subject calculation.
_____NO __X__YES Justification Attachment _____, _____ pages

Alternate Verification method approved _____ Method _____

Date 10/15/01

ITEM(S) CHECKED	Accept Y/N	OBJECTIVE EVIDENCE Sheets		INITIAL/ DATE
1. Cover forms properly completed.	Y			10/15
2. Calculation Sheet headers complete with calc. no., rev., etc.	Y			10/15
3. Calculation Sheet contents complete per format.	Y			10/15
4. Listed attachments included.	Y			10/15
5. Calculation Objective clearly described.	Y			10/15
6. Criteria are suitable and properly referenced to task-specific documents.	Y			10/15
7. Assumptions and data described and attached or referenced to task documents.	Y			10/15
8. Calculation method identified and appropriate for the design activity.	Y			10/15
9. Calculation results reasonable and correctly described in Results and Conclusions.	Y			10/15
10. Computer Program identified with version and revision.	N/A			
11. Computer Program references method used, etc.	N/A			
12. Computer input/output provided.	N/A			
13. Computer run traceable to calculation.	N/A			
14. Computer input data within permissible design input range.	N/A			
15. Computer Program validation/verification addressed.	N/A			

REMARKS

Checker Print Name & Sign
JIM WEEKS

Date 10/15/01

Preparer Print Name & Sign
DAVID APPLE

Date 10-16-01

HNR Holmes & Narver | Raytheon **STRUCTURAL DESIGN CALCULATION SHEET**	Project Title: CCN CHILLED WATER SYSTEM OPTIMIZATION MASTER PLAN Project ID #100256 Task Order #053 3 of 19
Calculation No. 3442.053.SCAL.007	PERFORMED BY : _____ 10/16/01 DAVID APPLE
Rev. No. A	CHECKED BY: _____ 10/16/01 JIM WEEKS
Calculation Title: LDCC & CCF FLOOR MOUNTED PIPE SUPPORT	

INTRODUCTION Purpose	Provide calculations and details for a floor mounted pipe support.
Scope	Design a floor mounted pipe support, for up to a 20 LF of 10" diameter Sch. 40 steel pipe with 1-1/2" insulation, and one butterfly valve, at a maximum height of 14'-0" AFF (above finished floor).
DESIGN BASIS Design Inputs	The LDCC and CCF facilities are each considered a Performance Category (PC) 1 facility. Pipe and associated component weights provided by Mechanical Engineer and from manufacturers printed information.
Criteria	LANL Facility Engineering Manual, Chapter 5 (Ref. 1) LANL Specification Section 13085, Seismic Protection (Ref. 2)
Assumptions	The LDCC and CCF floor concrete strength, f'c, is at least 3000 psi. Pipe saddle and insulation shield will provide for adequate pipe movement for this application.
REFERENCES	(1) LANL Facility Engineering Manual, Chapter 5 (2) LANL Specification Section 13085, Seismic Protection (3) ASCE 7-98 (4) AISC Manual of Steel Construction, 9th Edition (5) IBC 2000 (6) DOE-STD-1020-94
METHODS	Hand calculations were used to prepare these calculations.
RESULTS AND CONCLUSIONS	Design calculations and details have been provided to support the piping at locations specified for this project.

CHECKED _____ DATE 9/27/01

APPROVED _____ DATE 9/27/01

Holmes & Narver
ARCHITECTS - ENGINEERS
6501 Americas Parkway NE Suite 700
Albuquerque, NM 87110

JOB NO. 034103442.0053
3442.053.SCAL.007 REV.A
SHEET 4 OF 19

TITLE LDCC & CLF FLOOR MOUNTED PIPE SUPPORT
CCN CHILLED WATER SYSTEM OPTIMIZATION MASTER PLAN

BY DAA DATE 9-24-01

#100256

KEYED NOTES

1. ADJUSTABLE PIPE SADDLE SUPPORT (fig. 264, GRINNELL Catalog PM-99). SIZE PER PIPE DIAMETER AND INSULATION THICKNESS SPECIFIED ELSEWHERE.
2. INSULATION SHIELD, SIZE PER MANUF. REC. (fig. 167, GRINNELL CATALOG PM-99)

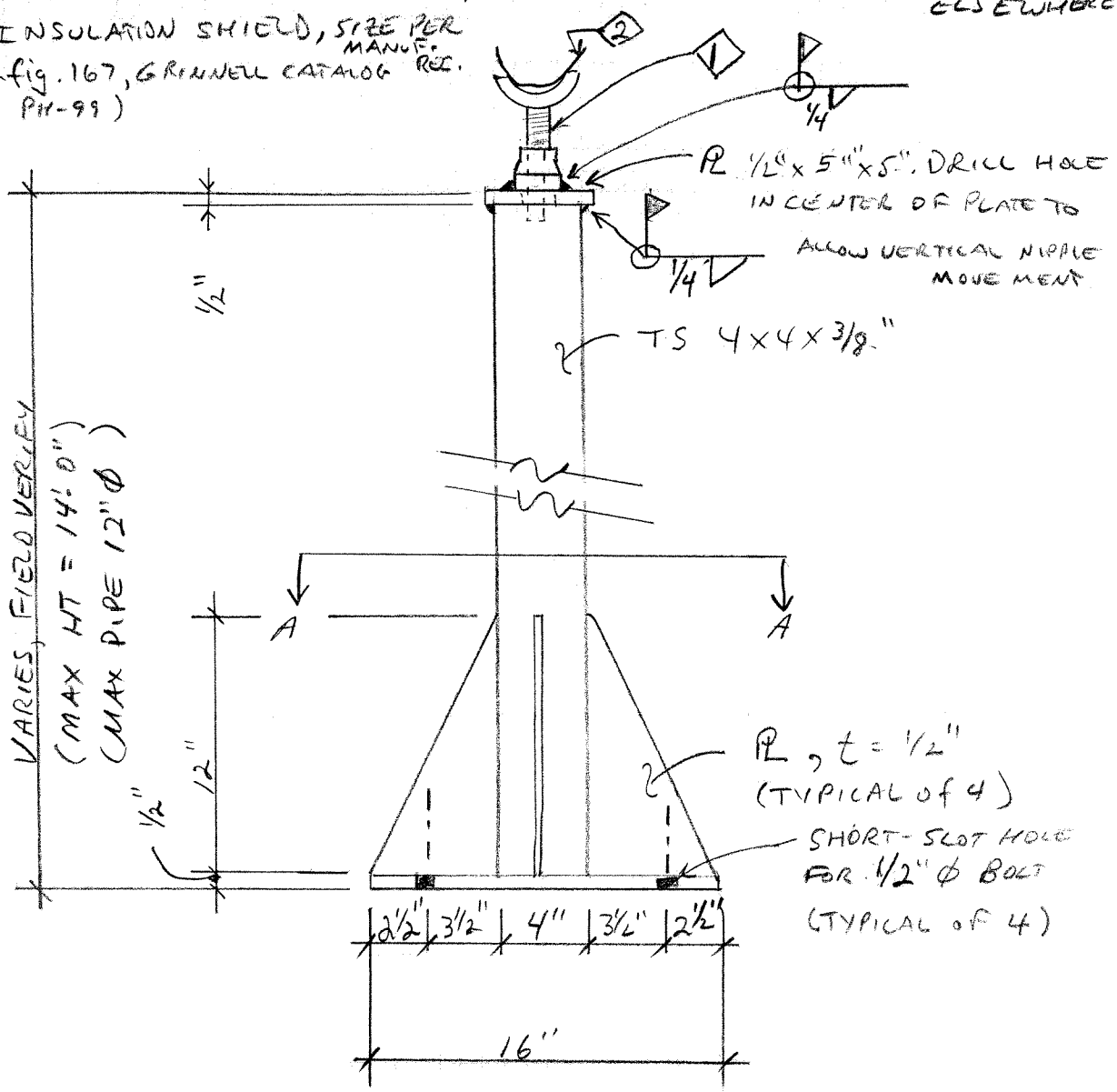

PIPE SUPPORT - FLOOR MOUNTED

SCALE:

FORM 8X8

CHECKED ✓ DATE 9/27/01

APPROVED ✓ DATE 9/27/01

Holmes & Narver
ARCHITECTS - ENGINEERS
6501 Americas Parkway NE Suite 700
Albuquerque, NM 87110

JOB NO. 034/03442.0053
3442.053.SCAL.007 REV A.

SHEET 5 OF 19

TITLE LOCC & CCF FLOOR MOUNTED PIPE SUPPORT BY DAA DATE 9-24-01
CCN CHILLED WATER SYSTEM OPTIMIZATION MASTER PLAN
#100256

KEYED NOTES (CONT.)

3. MOUNT USING HILTI HSL M 12/50 HEAVY-DUTY EXPANSION ANCHOR (ITEM NO. 00006593, HILTI 2001 CATALOG). INSTALL PER MANUFACTURER RECOMMENDATIONS.

4. LOCATE BASE PLATE PER PLANS.

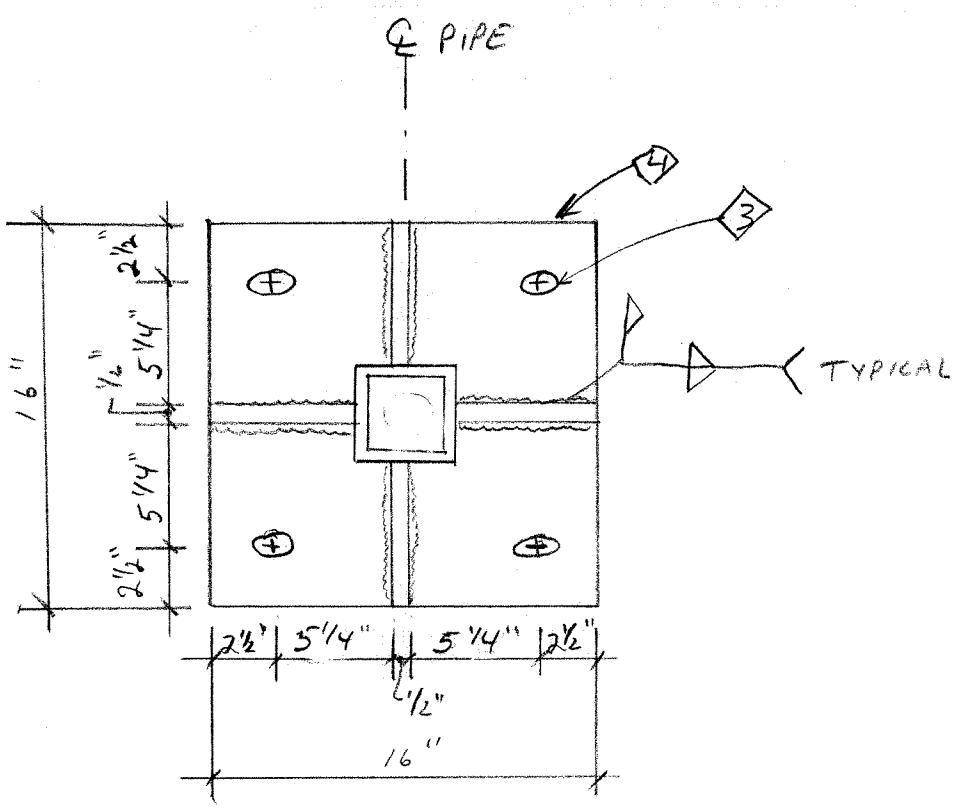

SECTION A-A PIPE SUPPORT

SCALE:

FORM 8X8

CHECKED _____ DATE 12/15/01

APPROVED _____ DATE 12/15/01

Holmes & Narver
ARCHITECTS - ENGINEERS
6501 Americas Parkway NE Suite 700
Albuquerque, NM 87110

JOB NO. 034/03442.0053
3442.053-SCAL.007 REV.A

SHEET 6 OF 19

TITLE LDCC & CCF FLOOR MOUNTED PIPE SUPPORT
CCN CHILLED WATER SYSTEM OPTIMIZATION MASTER PLAN

BY DAA DATE 9-24-01

#100256

FOR TS AS VERTICAL SUPPORT MEMBER, CHECK CAPACITY OF THE FOLLOWING SIZES FOR P_{MAX}, WITH A MAXIMUM LENGTH OF 14'-0", K = 2.1 (FIX BOT, FREE TOP)

F_a (ksi)	P_a (k)		AREA (in²)	PLF	r	KL/r	
2.84	7.9	TS 4x4x3/16"	2.77	9.42	1.54	229	KL = 29.4 ft
2.73	9.8	" 4x4x1/4"	3.59	12.21	1.51	233.6	
2.62	11.4	" 4x4x5/16"	4.36	14.83	1.48	238.4	
2.52	12.8	" 4x4x3/8"	5.08	17.27	1.45	243.3	—
2.31	14.7	" 4x4x1/2"	6.36	21.63	1.39	253.8	

$$C_c = \sqrt{\frac{2\pi^2 E}{F_y}} = \left[\frac{2\pi^2\ 29{,}000\ ksi}{46\ ksi}\right]^{1/2} = 111.5 \quad —$$

$$F_a = \frac{12\pi^2 E}{23(Kl/r)^2} = \frac{(12)(\pi^2)(29000\ ksi)}{(23)(Kl/r)^2} = _____\ ksi$$

t =				
1/4"	min 3/16"	max 3/16"	⇒ USE 3/16" fillet weld.	
5/16"	min 3/16"	max 1/4"	⇒ USE 1/4" "	"
3/8"	min 3/16"	max 5/16"	⇒ USE 1/4" "	"
1/2"	min 3/16"	max 7/16	⇒ USE 5/16" "	"

Assume 20' 10" water, insul.

PIPE	41 plf	= 810 lbs	—
WTR	34 plf	= 640 lbs	—
INSUL	2.5 plf	= 50 lbs	—
BF	125 lbs	= 125 lbs	—
		1625 lbs	⇒ TS 4x4x 3/8 ok

USE TS 4x4x 3/8 (Based on min)

$P_{max} \leq P_a$ ∴ ok

FORM 8X8

Holmes & Narver
Architects – Engineers
6501 Americas Parkway NE Suite 700
Albuquerque, NM 87110

CHECKED DATE 10/15/01 JOB NO. 3442.053.SCAL.007
Rev. A

APPROVED DATE 10/15/01 SHEET 1 OF 13

BY DAA DATE 10-15-01

TITLE LDCC & CCF Floor Mounted Pipe Support
#100256 CHILLED WATER SYSTEM OPTIMIZATION MASTER PLAN

APPENDIX

Drawing No. C52952, Sheet M10	1 page
Drawing No. C52952, Sheet M15	1 page
AISC ASD 9th Edition, p. 1-96, Structural Tubing, Square	1 page
AISC ASD 9th Edition, p. 5-135, Table C-C2.1	1 page
AISC ASD 9th Edition, p. 5-71, Table J3.1	1 page
Grinnell Pipe Hangers	3 pages
Hilti Systems and Solutions	2 pages
Hilti North America Product Technical Guide	2 pages

8

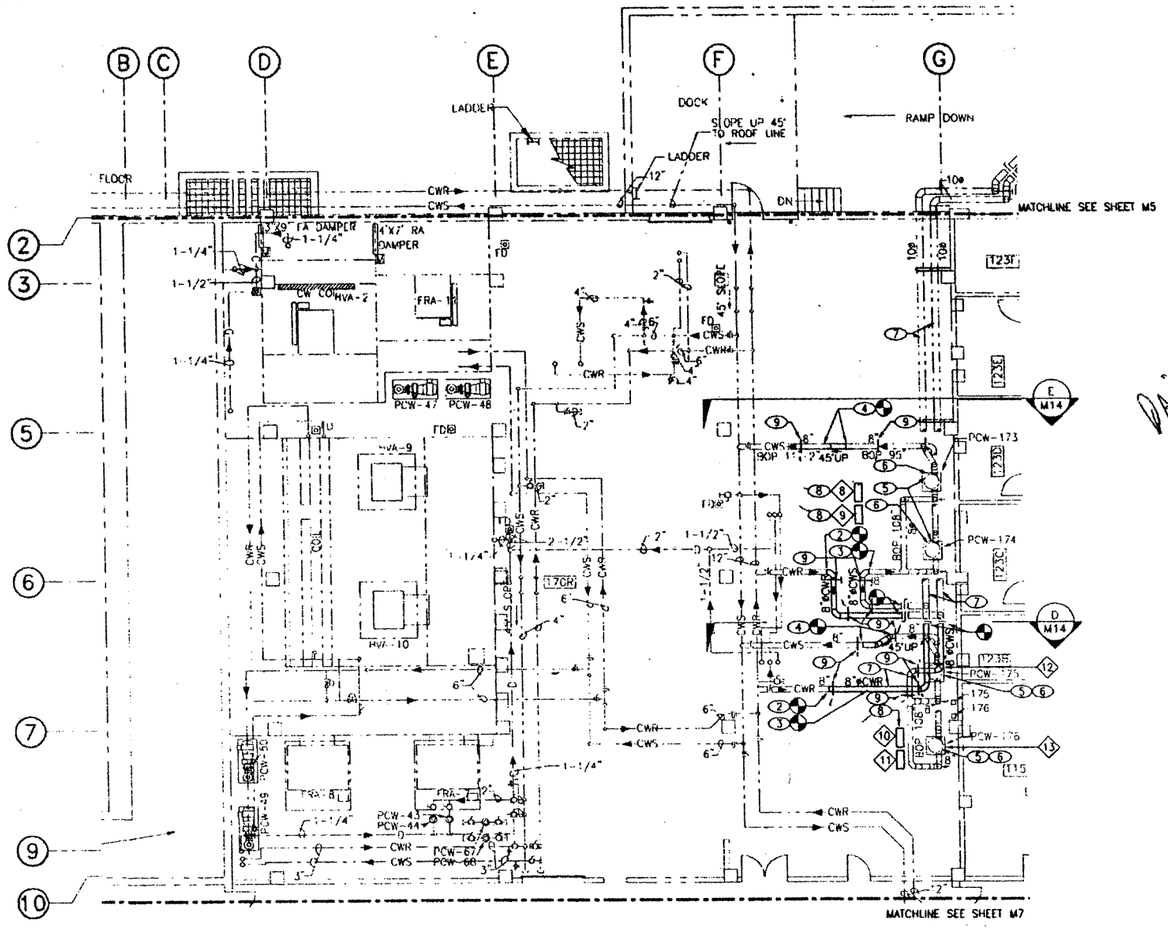

CHILLED WATER PIPING PLAN – AREA C
SCALE: 1/8"=1'-0"

1/8"=1'-0"

3 places shown
Each stand has 2 VFD units.
David: Verify the # of support stands.

David – It is

(9) 11 places

Piping layout changed from previous print

GENERAL NOTES

1. PROVIDE PIPE SUPPORTS FOR SECTIONS OF INSTALLED PIPING. SEE DETAIL (?/?).

KEYED NOTES

1. CONNECT 8"ø CWS TO THE FORMER 10"ø TWS PIPING AND THE 8"ø CWR TO THE FORMER 10"ø TWS PIPING AS SHOWN.
2. CONNECT 8"ø CWR PIPING TO THE EXISTING 8"ø CWR PIPING AS INDICATED. MOUNT PIPE UP AS HIGH AS POSSIBLE.
3. CONNECT THE 8"ø CWS TO THE EXISTING PUMP SUCTION PIPING AS INDICATED.
4. INSTALL 8"ø CWS PIPING TO BRIDGE THE PIPING GAP LEFT BY THE CHILLER REMOVAL.
5. INSTALL ASD COMPATIBLE 40 HP MOTOR.
6. INSTALL PACKAGED 11" DIAMETER IMPELLER, SHAFT, BEARINGS, MECHANICAL SEAL, CASE, IMPELLER WEAR RINGS AND SHAFT SLEEVES.
7. INSULATE CONVERTED TOWER WATER TO CHILLED WATER PIPING. SEE SPECIFICATIONS. ADJUST AND/OR REPLACE PIPE ROLLERS TO FIT PIPE AND INSULATION.
8. INSTALL 50HP ASD'S ON SUPPORT STAND. SEE DETAIL (3/M15). REFER TO DIVISION 16 FOR ELECTRICAL WORK.
9. INSTALL FLOOR MOUNTED FLOOR STAND. SEE DETAIL (1/M15).

HARD TO FOLLOW ARROWS. Pointing to ~~S~~ FLOOR STAND SUPPORTS

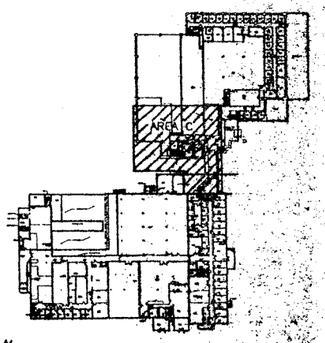

KEYPLAN
SCALE: NONE

NOT FOR CONSTRUCTION

NO.	DATE	CLASS REV	REVISIONS	DRWN	DES	CHKD	SUB	APP
B	10/5/01		90% "IN-HOUSE REVIEW"	RC	MS	DO		
A	9/18/01		60% "IN-HOUSE REVIEW"	RC	MS	DO		

HOLMES & NARVER/RAYTHEON (HNR)
HOLMES & NARVER/RAYTHEON ENGINEERS & CONSTRUCTORS
CRAVEN-SCHUTZE CONSULTING ENGINEERS
BRIDGING & FATTON CONSULTING ENGINEERS

CCN CHILLED WATER SYSTEM OPTIMIZATION MASTER PLAN
MECH: CHILLED WATER PIPING PLAN – AREA C

BLDG. 1498 & 132

DRAWN: DR. DORSEY
DESIGN: MC. SLAMAN
CHECKED: D. DORSEY
DATE: 10/05/01

SUBMITTED: DWIGHT DORSEY
APPROVED FOR RELEASE: DONALD HEFFLEY

Los Alamos — Los Alamos National Laboratory, Los Alamos, New Mexico 87545

SHEET: M1D

CLASSIFICATION: UNCLASSIFIED

PROJECT ID: 100256
DRAWING NO.: C52952
REV: B

ENGINEER'S SEAL

Cad File Name: 50X0250A10.dwg
Date Plotted: 10/08/01
Time Plotted: 08:51:18
Login Initials: TPO

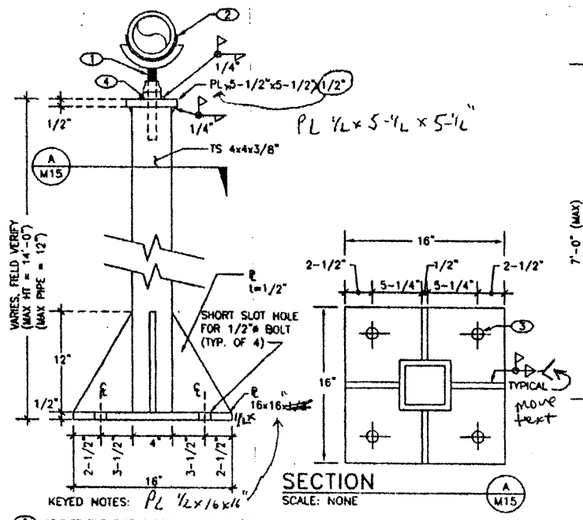

SECTION
SCALE: NONE

1. ADJUSTABLE PIPE SADDLE SUPPORT (FIG. 264, GRINNELL CATALOG PH-99). SIZE PER PIPE DIAMETER AND INSULATION THICKNESS, SPECIFIED ELSEWHERE.
2. INSULATION SHIELD. SIZE PER PIPE DIAMETER AND INSULATION THICKNESS SPECIFIED ELSEWHERE.
3. MOUNT USING HILTI HSL M 12/50 HEAVY-DUTY EXPANSION ANCHOR (ITEM NO. 00066593, HILTI 2001 CATALOG). INSTALL PER MANUFACTURERS RECOMMENDATIONS.
4. DRILL HOLE IN CENTER OF PLATE TO ALLOW VERTICAL SUPPORT MOVEMENT.

PIPE SUPPORT – FLOOR MOUNTED

SCALE: NONE

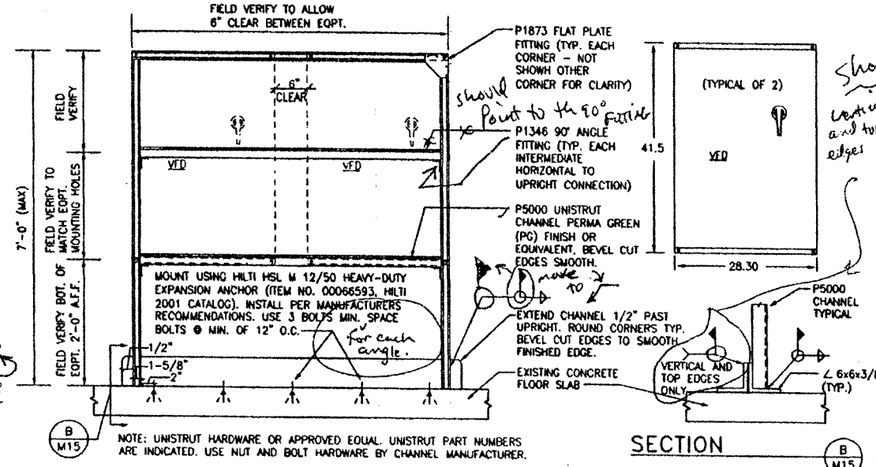

NOTE: UNISTRUT HARDWARE OR APPROVED EQUAL. UNISTRUT PART NUMBERS ARE INDICATED. USE NUT AND BOLT HARDWARE BY CHANNEL MANUFACTURER.

VFD SUPPORT STAND

SCALE: NONE

SECTION

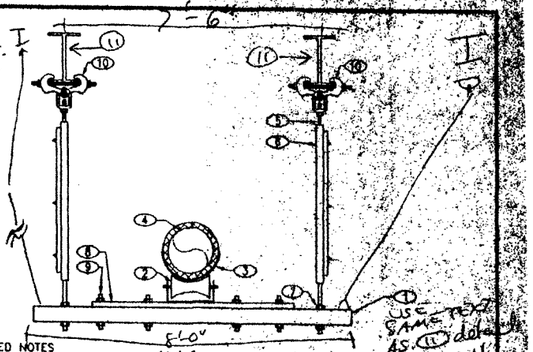

PIPE HANGER SUPPORT

SCALE: NONE

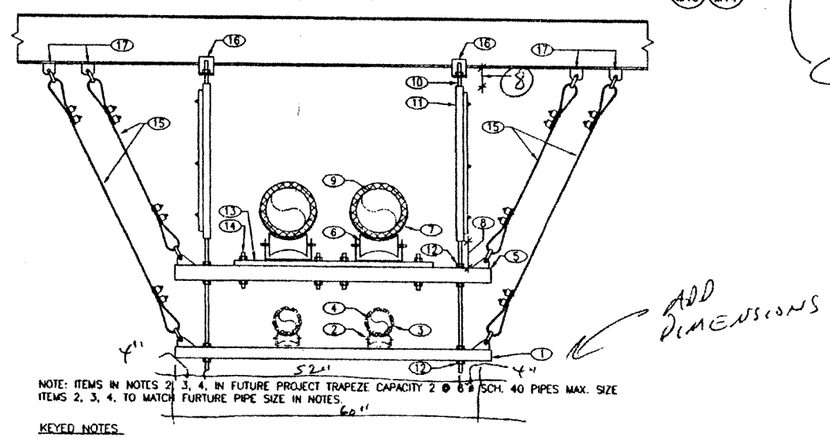

NOTE: ITEMS IN NOTES 2, 3, 4, IN FUTURE PROJECT TRAPEZE CAPACITY 2 @ 6"ø SCH. 40 PIPES MAX. SIZE ITEMS 2, 3, 4, TO MATCH FURTURE PIPE SIZE IN NOTES.

KEYED NOTES

1. P5000 UNISTRUT CHANNEL PERMA GREEN (PG) FINISH OR EQUIVALENT, BEVEL CUT EDGES SMOOTH.
2. 16" PIPE ROLL STAND. SEE GRINNELL FIG. 271, (OR APPROVED EQUAL) ATTACH PER MANUFACTURERS RECOMMENDATIONS. N.I.C. (FUTURE)
3. PROTECTION SADDLE N.I.C. (FUTURE)
4. 6"ø SCH 40 STEEL PIPE WITH 1-1/2" INSULATION. SEE SPECIFICATIONS. N.I.C. (FUTURE)
5. TS 4x4x3/8", BEVEL CUT EDGES SMOOTH.
6. 16" PIPE ROLL STAND. SEE GRINNELL FIG. 271 (OR APPROVED EQUAL). ATTACH PER MANUFACTURERS RECOMMENDATIONS.
7. 16" INSULATION PROTECTION SADDLE.
8. 6" MAXIMUM, TYPICAL
9. 12"ø SCH 40 STEEL PIPE WITH 1-1/2" INSULATION. SEE SPECIFICATIONS.
10. 7/8"ø ASTM A36 ALL THREADED ROD.
11. ROD STIFFNER FOR 7/8"ø ROD. SECURE WITH 2 BOLTS MIN., 12" O.C. MAX. (TOLCO FIG. 98 OR APPROVED EQUAL).
12. WASHER, NUT, TYPICAL EACH END EACH SIDE OF HORIZONTAL MEMBER.
13. P1000 (UNISTRUT OR APPROVED EQUAL)
14. 1/2"ø BOLT, NUT, LOCK WASHER, TYP. OF 4
15. CABLE SWAY BRACE ASSEMBLY. USE 1/4" DIA. GALVANIZED 7x19 CORE STRAND AIRCRAFT CABLE. USE CLAMPS TO FULLY DEVELOP CABLE STRENGTH. ATTACH TO TRAPEZE WITH TOLCO FIG. 982, CABLE SWAY BRACE ATTACHMENT, OR APPROVED EQUAL. THRU BOLT TO TRAPEEZE AND MECHANICALLY ATTACH TO 7/8"ø ROD USING A 1/4" THICK PLATE.
16. BEAM CLAMP, GRINNELL FIG. 292 OR APPROVED EQUAL. VERIFY SIZE OF SUPPORT BEAM FLANGE.
17. USE WELDING LUG, TOLCO FIG. 343 OR APPROVED EQUAL. CONNECT SWAY BRACE ATTACHMENT WITH 3/4" DIA. BOLT, WASHER, DOUBLE NUT.

PIPE HANGER – DOUBLE TRAPEZE

SCALE: NONE

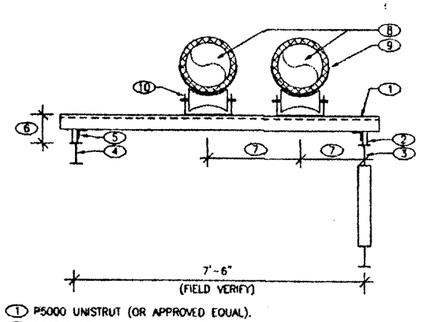

1. P5000 UNISTRUT (OR APPROVED EQUAL).
2. POST BASE P2072A UNISTRUT (OR APPROVED EQUAL), TYPICAL. ANCHOR TO SUPPORT MEMBER PER MANUFACTURERS RECOMMENDATIONS.
3. BT-4 TRUSS EXISTING. DRYWALL COVERING MEMBER, NOT SHOWN.
4. W 8x28 MEZZANINE FRAMING MEMBER. DRYWALL COVERING MEMBER, NOT SHOWN.
5. P1000 UNISTRUT POST AND P1325 90° FITTING, TYPICAL
6. ADJUST LENGTH OF P1000 UNISTRUT POST TO PROVIDE 12 INCHES FOR THIS DIMENSION.
7. FIELD VERIFY.
8. 4" DIA. SCH. 40 STEEL PIPE AND INSULATION.
9. INSULATION PROTECTION SADDLE TYPICAL.
10. PIPE ROLL STAND, GRINNELL FIG. 271 OR APPROVAL EQUAL.

SCLE AND MOUNT PER MANUFACTURERS RECOMMENDATIONS.

PIPE SUPPORT

SCALE: NONE

FOR 2-4" DIA. PIPES

ADD SWAY BRACING to DETAIL 5 USE (4/MF) components & call outs w/correct keynote #'s.

NOT FOR CONSTRUCTION

REV	DATE	CLASS REV	REVISIONS				
B	10/5/01		90% "IN-HOUSE REVIEW"	RC	MS	BD	
A	9/18/01		80% "IN-HOUSE REVIEW"	RC	MS	BD	

HOLMES & NARVER/RAYTHEON (HNR)

HOLMES & NARVER/RAYTHEON ENGINEERS & CONSTRUCTORS
CLAYCO—GREYER CONSULTING ENGINEERS
BERGER & PATTON COMPUTING ENGINEERS

CCN CHILLED WATER SYSTEM OPTIMIZATION MASTER PLAN

MECH: DETAILS

BLDG. 1498 & 132

SUBMITTED: DWIGHT DORSEY

APPROVED FOR RELEASE: BOBBY HEFELE

Los Alamos — Los Alamos National Laboratory, Los Alamos, New Mexico 87545

SHEET M15

PROJECT ID 100256

DRAWING NO. C52952

REV. B

ENGINEER'S SEAL

Date Plotted: 10/11/01

Cad File Name: 50320B015.dwg

Cad File Path: H:\50320.DT\cad\mech\

Login Initials: TPC

Time Plotted: 09:18:52

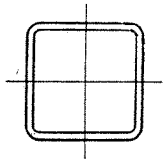

STRUCTURAL TUBING
Square
Dimensions and properties

Dimensions				Properties**					
Nominal* Size	Wall Thickness		Weight per Ft	Area	I	S	r	J	Z
In.	In.		Lb.	In.^{2}	In.^{4}	In.^{3}	In.	In.^{4}	In.^{3}
4.5×4.5	0.2500	¼	13.91	4.09	12.1	5.36	1.72	19.7	6.43
	0.1875	3/16	10.70	3.14	9.60	4.27	1.75	15.4	5.03
4×4	0.5000	½	21.63	6.36	12.3	6.13	1.39	21.8	8.02
	0.3750	⅜	17.27	5.08	10.7	5.35	1.45	18.4	6.72
	0.3125	5/16	14.83	4.36	9.58	4.79	1.48	16.1	5.90
	0.2500	¼	12.21	3.59	8.22	4.11	1.51	13.5	4.97
	0.1875	3/16	9.42	2.77	6.59	3.30	1.54	10.6	3.91
3.5×3.5	0.3125	5/16	12.70	3.73	6.09	3.48	1.28	10.4	4.35
	0.2500	¼	10.51	3.09	5.29	3.02	1.31	8.82	3.70
	0.1875	3/16	8.15	2.39	4.29	2.45	1.34	6.99	2.93
3×3	0.3125	5/16	10.58	3.11	3.58	2.39	1.07	6.22	3.04
	0.2500	¼	8.81	2.59	3.16	2.10	1.10	5.35	2.61
	0.1875	3/16	6.87	2.02	2.60	1.73	1.13	4.28	2.10
2.5×2.5	0.3125	5/16	8.45	2.48	1.87	1.50	0.868	3.32	1.96
	0.2500	¼	7.11	2.09	1.69	1.35	0.899	2.92	1.71
	0.1875	3/16	5.59	1.64	1.42	1.14	0.930	2.38	1.40
2×2	0.3125	5/16	6.32	1.86	0.815	0.815	0.662	1.49	1.11
	0.2500	¼	5.41	1.59	0.766	0.766	0.694	1.36	1.00
	0.1875	3/16	4.32	1.27	0.668	0.668	0.726	1.15	0.840

*Outside dimensions across flat sides.
**Properties are based upon a nominal outside corner radius equal to two times the wall thickness.

STRUCTURAL TUBING
Rectangular
Dimensions and properties

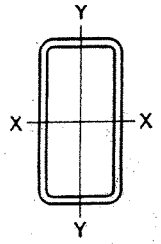

Dimensions				Properties**									
Nominal* Size	Wall Thickness		Weight per Ft	Area	X-X Axis				Y-Y Axis				J
					I_x	S_x	Z_x	r_x	I_y	S_y	Z_y	r_y	
In.	In.		Lb.	In.^{2}	In.^{4}	In.^{3}	In.^{3}	In.	In.^{4}	In.^{3}	In.^{3}	In.	In.^{4}
20×12	0.5000	½	103.30	30.4	1650	165	201	7.37	750	125	141	4.97	1650
	0.3750	⅜	78.52	23.1	1280	128	154	7.45	583	97.2	109	5.03	1270
	0.3125	5/16	65.87	19.4	1080	108	130	7.47	495	82.5	91.8	5.06	1070
20× 8	0.5000	½	89.68	26.4	1270	127	162	6.94	300	75.1	84.7	3.38	806
	0.3750	⅜	68.31	20.1	988	98.8	125	7.02	236	59.1	65.6	3.43	625
	0.3125	5/16	57.36	16.9	838	83.8	105	7.05	202	50.4	55.6	3.46	529
20× 4	0.5000	½	76.07	22.4	889	88.9	123	6.31	61.6	30.8	36.0	1.66	205
	0.3750	⅜	58.10	17.1	699	69.9	95.3	6.40	50.3	25.1	28.5	1.72	165
	0.3125	5/16	48.86	14.4	596	59.6	80.8	6.44	43.7	21.8	24.3	1.74	143
18× 6	0.5000	½	76.07	22.4	818	90.9	119	6.05	141	47.2	53.9	2.52	410
	0.3750	⅜	58.10	17.1	641	71.3	92.2	6.13	113	37.6	42.1	2.57	322
	0.3125	5/16	48.86	14.4	546	60.7	78.1	6.17	97.0	32.3	35.8	2.60	274
16×12	0.6250	⅝	110.36	32.4	1160	145	175	5.98	742	124	144	4.78	1460
	0.5000	½	89.68	26.4	962	120	144	6.04	618	103	118	4.84	1200
	0.3750	⅜	68.31	20.1	748	93.5	111	6.11	482	80.3	91.3	4.90	922
	0.3125	5/16	57.36	16.9	635	79.4	93.8	6.14	409	68.2	77.2	4.93	777
16× 8	0.5000	½	76.07	22.4	722	90.2	113	5.68	244	61.0	69.7	3.30	599
	0.3750	⅜	58.10	17.1	565	70.6	87.6	5.75	193	48.2	54.2	3.36	465
	0.3125	5/16	48.86	14.4	481	60.1	74.2	5.79	165	41.2	45.9	3.39	394
16× 4	0.5000	½	62.46	18.4	481	60.2	82.2	5.12	49.3	24.6	29.0	1.64	157
	0.3750	⅜	47.90	14.1	382	47.8	64.2	5.21	40.4	20.2	23.0	1.69	127
	0.3125	5/16	40.35	11.9	327	40.9	54.5	5.25	35.1	17.6	19.7	1.72	110
14×10	0.6250	⅝	93.34	27.4	728	104	127	5.15	431	86.2	101	3.96	885
	0.5000	½	76.07	22.4	608	86.9	105	5.22	361	72.3	83.6	4.02	730
	0.3750	⅜	58.10	17.1	476	68.0	81.5	5.28	284	56.8	64.8	4.08	564
	0.3125	5/16	48.86	14.4	405	57.9	69.0	5.31	242	48.4	54.9	4.11	477

*Outside dimensions across flat sides.
**Properties are based upon a nominal outside corner radius equal to two times the wall thickness.

10

the top of the column. On the other hand, the restraining influence of foundations, even where these footings are designed only for vertical load, can be very substantial in the case of flat-ended column base details with ordinary anchorage (Galambos, 1960). For this condition, a design K-value of 1.5 would generally be conservative in Case f.

While in some cases the existence of masonry walls provides enough lateral support for their building frames to control lateral deflection, the increasing use of light curtain wall construction and wide column spacing for high-rise structures not provided with a positive system of diagonal bracing can create a situation where only the bending stiffness of the frame itself provides this support.

Table C-C2.1

	(a)	(b)	(c)	(d)	(e)	(f)
Buckled shape of column is shown by dashed line	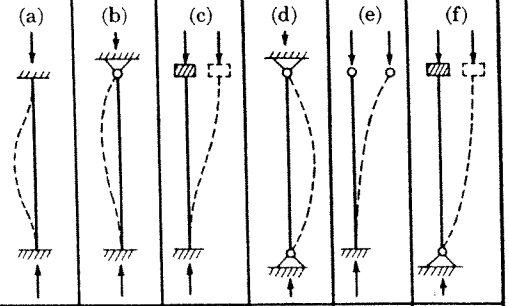					
Theoretical K value	0.5	0.7	1.0	1.0	2.0	2.0
Recommended design value when ideal conditions are approximated	0.65	0.80	1.2	1.0	2.10	2.0
End condition code		Rotation fixed and translation fixed Rotation free and translation fixed Rotation fixed and translation free Rotation free and translation free				

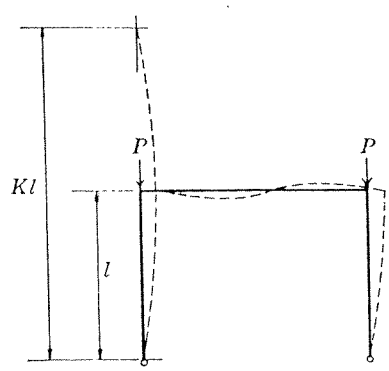

Figure C-C2.1

J3. BOLTS, THREADED PARTS AND RIVETS

1. High-strength Bolts

Except as otherwise provided in this Specification, use of high-strength bolts shall conform to the provisions of the *Specification for Structural Joints Using ASTM A325 or A490 Bolts* approved by the Research Council on Structural Connections of the Engineering Foundation (RCSC).

If required to be tightened to more than 50% of their minimum specified tensile strength, ASTM A449 bolts in tension and bearing-type shear connections shall have an ASTM F436 hardened washer installed under the bolt head, and the nuts shall meet the requirements of ASTM A563.

2. Size and Use of Holes

a. The *maximum sizes* of holes for bolts are given in Table J3.1, except that larger holes, required for tolerance on location of anchor bolts in concrete foundations, are permitted in column base details.

b. *Standard holes* shall be provided in member-to-member connections, unless oversized, short-slotted or long-slotted holes in bolted connections are approved by the designer. Finger shims up to ¼ in. may be introduced into slip-critical connections designed on the basis of standard holes without reducing the allowable shear stress of the fastener.

c. *Oversized holes* are permitted in any or all plies of slip-critical connections, but they shall not be used in bearing-type connections. Hardened washers shall be installed over oversized holes in an outer ply.

d. *Short-slotted holes* are permitted in any or all plies of slip-critical or bearing-type connections. The slots are permitted without regard to direction of loading in slip-critical connections, but the length shall be normal to the direction of the load in bearing-type connections. Washers shall be installed over short-slotted holes in an outer ply; when high-strength bolts are used, such washers shall be hardened.

e. *Long-slotted holes* are permitted in only one of the connected parts of either a slip-critical or bearing-type connection at an individual faying surface. Long-slotted holes are permitted without regard to direction of loading in slip-critical connections, but shall be normal to the direction of load in bearing-type connections. Where long-slotted holes are used in an outer ply, plate washers or a continuous bar with standard holes, having a size suf-

TABLE J3.1
Nominal Hole Dimensions

Bolt Dia.	Hole Dimensions			
	Standard (Dia.)	Oversize (Dia.)	Short-slot (Width × length)	Long-slot (Width × length)
½	9/16	5/8	9/16 × 11/16	9/16 × 1¼
5/8	11/16	13/16	11/16 × 7/8	11/16 × 1 9/16
3/4	13/16	15/16	13/16 × 1	13/16 × 1 7/8
7/8	15/16	1 1/16	15/16 × 1 1/8	15/16 × 2 3/16
1	1 1/16	1¼	1 1/16 × 1 5/16	1 1/16 × 2½
≥1 1/8	d + 1/16	d + 5/16	(d + 1/16) × (d + 3/8)	(d + 1/16) × (2.5 × d)

13

Grinnell®

Pipe Hangers

Catalog PH-99

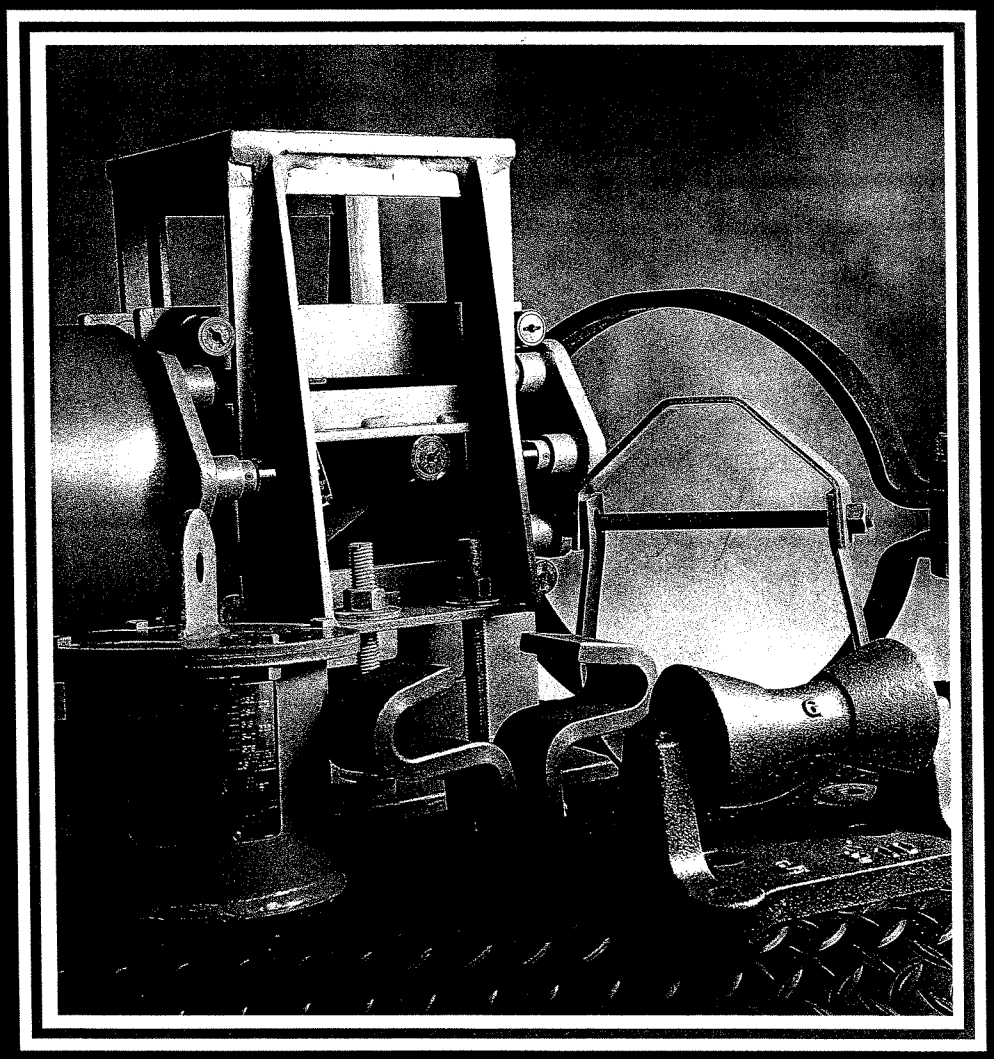

adjustable pipe saddle support
fig. 264

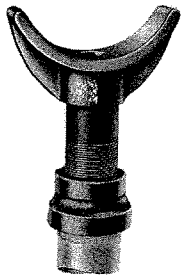

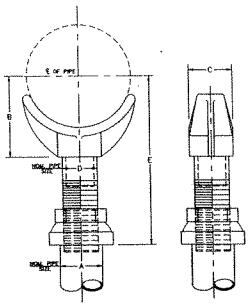

SIZE RANGE: 2½ through 36 inch pipe.

MATERIAL: Cast iron saddle, locknut nipple and special cast iron reducer, ♦ assembled.

FINISH: Black or galvanized.

SERVICES: Stanchion type support where vertical adjustment of steel pipe is required.

APPROVALS: Complies with Federal Specification WW-H-171E (Type 39) and Manufacturers Standardization Society SP-69 (Type 38).

INSTALLATION: Adjustment is obtained by turning the locknut nipple. The lower end of the nipple is staked, upsetting the threads to prevent separation of nipple and coupling during adjustment.

FEATURES:
- Vertical adjustment of approximately 4½ inches.
- Saddle supports a broad range of pipe sizes.

ORDERING: Specify pipe size to be supported, figure number, name.

FINISH: Black.

weights • dimensions (inches)

pipe size	wgt (approx) lbs each: complete	wgt (approx) lbs each: saddle only	A	B	D	E min	E max	width C
2½	9.0	4.8	2½	3½	1½	8	13	3
3	9.2	5.0	2½	3¾	1½	8¼	13¼	3
3½	9.4	5.2	2½	4	1½	8½	13½	3
4	15.0	7.6	3	4¼	2½	9¼	14	3⅝
5	16.7	8.3	3	4⅞	2½	10	14¾	3⅝
6	17.7	10.3	3	5½	2½	10½	15¼	3⅝
8	20.2	12.8	3	6⅞	2½	11¾	16½	3⅝
10	25.2	17.8	3	8½	2½	13½	18¼	3⅝
12	29.0	21.6	3	9 15/16	2½	15	19¾	3⅝
14	40.2	38.0	4	10 15/16	3	16¼	20¾	4⅝
16	53.2	42.0	4	12⅜	3	17¾	22¼	4⅝
18	70.8	51.0	6	13⅞	3½	19½	24	4⅝
20	104.8	85.0	6	15⅜	3½	21	25½	6¾
24	137.0	110.0	6	17 15/16	4	23¾	28¼	6¾
30	170.0	150.0	6	21 5/16	4	27	31½	6¾
32	181.0	161.1	6	22½	4	28¼	32¾	8¾
36	249.0	229.0	6	24½	4	30¼	34¾	8¾

♦ The special cast iron reducer may be furnished with a hex-shaped smaller end.

shield

rib-lok shield
fig. 168

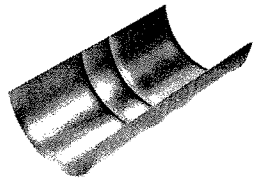

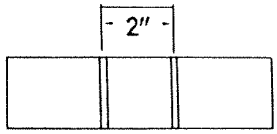

SIZE RANGE: For use with ½ through 6 inch pipe with insulation thickness of ½, ¾, 1, 1½, or 2 inches.

MATERIAL: Carbon steel.

FINISH: Galvanized.

SERVICE: To be used with fig. 65 or fig. 260 clevis. Designed to prevent damage to insulation by hanger. Ribs keep shield centered on hanger.

HOW TO SIZE: Refer to shield size selection table below.

ORDERING: Specify size, figure number, name.

shield size #	max O.D. of insulation	stock sizes	weight (approx) lb each
1	2⅜	18 ga. x 8	.44
2	2⅞	18 ga. x 8	.52
3	3½	18 ga. x 8	.63
4	4	18 ga. x 8	.71
5	4½	18 ga. x 8	.81
6	5	18 ga. x 8	.90
7	5⅝	18 ga. x 8	1.01
8	6⅝	18 ga. x 8	1.20
9	7⅝	18 ga. x 12	2.04
10	8⅝	18 ga. x 12	2.29
11	9⅝	18 ga. x 12	2.20
12	10¾	18 ga. x 12	2.86
13	11¾	18 ga. x 12	3.2
14	12¾	18 ga. x 12	3.5

shield size selection table

pipe size	insulation thickness (inches): ½	¾	1	1½	2
½	1	1	...	...	...
¾	1	1	2	4	6
1	1	2	3	5	7
1¼	2	3	3	6	7
1½	2	3	4	6	7
2	3	4	5	7	8
2½	4	5	6	7	8
3	5	6	7	8	9
3½	...	...	8	9	10
4	...	...	8	9	10
5	...	...	9	10	11
6	...	...	10	11	12
8	...	...	12	13	14

For sizes of fig. 65 or fig. 260 clevis for use with shields outside of insulation use table for fig. 167 on page ph-80.

15

insulation shield

insulation protection shield fig. 167

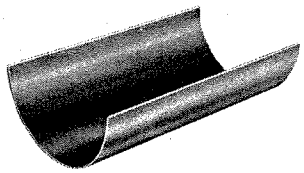

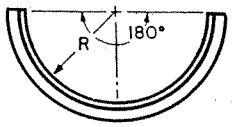

SIZE RANGE: For use with ½″ through 24″ pipe with insulation thicknesses of ½″, ¾″, 1″, 1½″ and 2″.

MATERIAL: Carbon steel.

FINISH: Galvanized.

SERVICE: Recommended for outside of foam or fiber glass insulation to preclude crushing of insulation without breaking the vapor barrier.

APPROVALS: Complies with Federal Specification WW-H-171E (Type 41) and Manufacturers Standardization Society SP-69 (Type 40).

HOW TO SIZE: Refer to "Shield Size Selection Table" below.

ORDERING: Specify size, figure number, name. Data applicable to shields for thicker insulation or larger pipe sizes is available upon request.

weights • dimensions (inches)

shield size	wgt (approx) lbs each	stock size	shield length	R
X1A	.54	18 Ga.	12	.95
1A	.69	18 Ga.	12	1.19
2A	.84	18 Ga.	12	1.44
3A	.99	18 Ga.	12	1.75
4A	1.1	18 Ga.	12	2.00
5A	1.3	18 Ga.	12	2.25
6A	1.4	18 Ga.	12	2.50
7A	1.6	18 Ga.	12	2.78
8A	1.9	16 Ga.	12	3.32
9A	2.7	16 Ga.	12	3.82
10A	3.1	16 Ga.	12	4.32
9B	4.0	16 Ga.	18	3.82
10B	4.6	16 Ga.	18	4.32
11B	5.1	16 Ga.	18	4.82
12B	5.6	16 Ga.	18	5.38
13C	10.2	14 Ga.	24	5.88
14C	11.1	14 Ga.	24	6.38
15C	12.3	14 Ga.	24	7.00
16C	12.7	14 Ga.	24	7.50
17C	13.6	14 Ga.	24	8.00
18C	14.5	14 Ga.	24	8.50
19C	21.2	12 Ga.	24	9.00
20C	22.4	12 Ga.	24	9.50
21C	23.6	12 Ga.	24	10.00
22C	24.8	12 Ga.	24	10.50
23C	25.9	12 Ga.	24	11.00
24C	27.1	12 Ga.	24	11.50
25C	28.3	12 Ga.	24	12.00
26C	31.0	12 Ga.	24	13.00
27C	31.8	12 Ga.	24	13.50
28C	33.0	12 Ga.	24	14.00

As actual foam or fiber glass insulation thicknesses vary, verify that the radius of the selected shield is suitable for the required application. Shields are designed for a maximum span of ten feet on four P.S.I. compressive strength insulation. For compressive strengths greater than four P.S.I., spans may be increased proportionately up to maximum allowable for steel pipe.

shield size selection table

pipe size	insulation thickness (inches) ½	¾	1	1½	2
½	1A■	1A	...	...	...
¾	1A	2A	3A	4A	6A
1	1A	2A	3A	5A	7A
1¼	2A	3A	4A	6A	7A
1½	2A	3A	4A	6A	8A
2	3A	4A	5A	7A	8A
2½	4A	5A	6A	8A	9A
3	5A	6A	7A	8A	9A
3½	...	...	8A	9A	10A
4	...	...	8A	9A	10A
5	...	...	9B	10B	11B
6	...	...	10B	11B	12B
8	...	...	12B	13C	14C
10	...	...	14C	15C	16C
12	...	...	16C	17C	18C
14	...	...	17C	18C	19C
16	...	...	19C	20C	21C
18	...	...	21C	22C	23C
20	...	...	23C	24C	25C
24	...	...	26C	27C	28C

■ For unarco foam specify X1A.

sizes of fig. 65 or fig. 260 clevis for use with shields outside of insulation

pipe size	insulation thickness (inches) ½	¾	1	1½	2
½	2	2	...	...	...
¾	2	2½	3	3½	5
1	2	2½	3	4	5
1¼	2½	3	3½	5	5
1½	2½	3	3½	5	6
2	3	3½	4	5	6
2½	3½	4	5	6	8
3	4	5	5	6	8
3½	...	...	6	8	8
4	...	...	6	8	8
5	...	...	8	8	10
6	...	...	8	10	10
8	...	...	10	12	12
10	...	...	12	14	16
12	...	...	16	16	18
14	...	...	16	18	18
16	...	...	18	20	20
18	...	...	20	...	...
20	...	...	...	24	24
24	...	...	...	...	...

HILTI

expertise. in every case.

Hilti Sales and Service
Queen,Brent P, Team Southwest
PO Box 21148
Tulsa OK 74121
800-879-8000 www.us.hilti.com
Cat -1, Tech -1, Credit 0, Fire 0, CD Fire 0

APPLE

Ship to:
DAVID APPLE
HOLMES & NARVER
6501 AMERICAS PKWY NE
SUITE 700
ALBUQUERQUE NM 87059

Systems and Solutions

1-800-879-8000
www.us.hilti.com

HSL (Bolt Version)

Item No	Description	Bit dia (mm)	Anchor Length (mm)	Minimum Embedment Depth (mm)	Average Ultimate Loads in 4000 psi Concrete Tension (lb)	Average Ultimate Loads in 4000 psi Concrete Shear (lb)	Allowable Working Loads 4000 psi Concrete Tension (lb)	Allowable Working Loads 4000 psi Concrete Shear (lb)	Qty Box	Stock Status
00066573	HSL M 8/20	12	95	65	5870	8345	1680	2390	40	–
00066575	HSL M 8/40	12	115	65	5870	8345	1680	2390	40	C
00066576	HSL M 10/20	15	107	75	8500	13220	2435	3790	20	–
00066578	HSL M 10/40	15	127	75	8500	13220	2435	3790	20	–
00066592	HSL M 12/25	18	120	80	11240	18900	3220	5420	20	–
00066593	HSL M 12/50	18	145	80	11240	18900	3220	5420	20	–
00066594	HSL M 16/25	24	148	105	20205	33640	5790	9645	10	R
00066595	HSL M 16/50	24	173	105	20205	33640	5790	9645	10	–
00066596	HSL M 20/30	28	183	130	25500	45020	7310	12905	6	–
00066597	HSL M 20/60	28	213	130	25500	45020	7310	12905	6	C
00260383	HSL M 24/30	32	205	155	34390	62615	9860	17950	4	C
00260384	HSL M 24/60	32	235	155	34390	62615	9860	17950	4	R

HSLB Torque Cap

Item No	Description	Bit dia (mm)	Anchor Length (mm)	Minimum Embedment Depth (mm)	Average Ultimate Loads in 4000 psi Concrete Tension (lb)	Average Ultimate Loads in 4000 psi Concrete Shear (lb)	Allowable Working Loads 4000 psi Concrete Tension (lb)	Allowable Working Loads 4000 psi Concrete Shear (lb)	Qty Box	Stock Status
00045706	HSLB M 12/6	18	–	80	11240	18900	3220	5420	20	R
00067400	HSLB M 12/25	18	120	80	11240	18900	3220	5420	20	–
00067401	HSLB M 12/50	18	145	80	11240	18900	3220	5420	20	C
00045707	HSLB M 16/6	24	–	80	20205	33640	5790	9654	10	C
00067402	HSLB M 16/25	24	148	105	20205	33640	5790	9654	10	C
00067403	HSLB M 16/50	24	173	105	20205	33640	5790	9654	10	C
00067404	HSLB M 20/30	28	183	130	25500	45020	7310	12905	6	C
00067405	HSLB M 20/60	28	213	130	25500	45020	7310	12905	6	C
00260385	HSLB M 24/30	32	205	155	34390	62615	9860	17950	4	C
00260386	HSLB M 24/60	32	235	155	34390	62615	9860	17950	4	C

HSLG-N Stud Anchor

Item No	Description	Bit dia (mm)	Anchor Length (mm)	Minimum Embedment Depth (mm)	Average Ultimate Loads in 4000 psi Concrete Tension (lb)	Average Ultimate Loads in 4000 psi Concrete Shear (lb)	Allowable Working Loads 4000 psi Concrete Tension (lb)	Allowable Working Loads 4000 psi Concrete Shear (lb)	Qty Box	Stock Status
00068411	HSLG-N 8/20	12	95	65	5870	6845	1680	1965	40	C
00068425	HSLG-N 10/20	15	107	75	8500	10840	2435	3110	20	C
00068439	HSLG-N 12/25	18	120	80	11240	15500	3220	4445	20	C
00068440	HSLG-N 12/50	18	145	80	11240	15500	3220	4445	20	C
00068452	HSLG-N 16/25	24	148	105	20205	27585	5790	7910	10	R
00068453	HSLG-N 16/50	24	173	105	20205	27585	5790	7910	10	C
00068465	HSLG-N 20/30	28	183	130	25500	36915	7310	10585	6	C
00068467	HSLG-N 20/60	28	213	130	25500	36915	7310	10585	6	C

HSLG-R Stainless Steel Stud Anchor

Item No	Description	Bit dia (mm)	Anchor Length (mm)	Minimum Embedment Depth (mm)	Average Ultimate Loads in 4000 psi Concrete Tension (lb)	Average Ultimate Loads in 4000 psi Concrete Shear (lb)	Allowable Working Loads 4000 psi Concrete Tension (lb)	Allowable Working Loads 4000 psi Concrete Shear (lb)	Qty Box	Stock Status
00067922	HSLG-R M 10/20	15	107	75	8985	12410	2575	3560	20	C
00067924	HSLG-R M 12/25	18	120	80	10835	18300	3105	5245	20	C
00067926	HSLG-R M 16/25	24	148	105	19005	35320	5450	10125	10	C
00067928	HSLG-R M 20/30	28	183	130	28520	50540	8175	14490	6	C

HSL-I Flush Anchor (Internally Threaded; 12mm Diameter)

Item No	Description	Bit dia (mm)	Anchor Length (mm)	Minimum Embedment Depth (mm)	Average Ultimate Loads in 4000 psi Concrete Tension (lb)	Average Ultimate Loads in 4000 psi Concrete Shear (lb)	Allowable Working Loads 4000 psi Concrete Tension (lb)	Allowable Working Loads 4000 psi Concrete Shear (lb)	Qty Box	Stock Status
00217174	HSL-I M12 TN 12mm Metric Flush Anchor with Torque Nut	18	150	80	11240	9450	3220	2710	20	C

TYPICAL DELIVERY TIMES

– Product available from nearest DC, next day delivery.
R Product will be shipped from regional DC, allow 2-3 days for delivery.
C Product only stocked in Central Warehouse, allow 3-6 days for delivery.

Hilti North America Product Technical Guide

APPCE 18

2001 EDITION

HILTI

expertise. in every case.

HSL Heavy Duty Sleeve Anchor

19

Carbon Steel HSL, HSLG, HSL-I Metric Ultimate Loads in Concrete [1,2]

Anchor Diameter	Embedment Depth mm (in.)	13.8 MPa (2000 psi)		20.7 MPa (3000 psi)		27.6 MPa (4000 psi)		34.5 MPa (5000 psi)		41.4 MPa (6000 psi)	
		Tension kN (lb)	Shear kN (lb)	Tension kN (lb)	Shear kN (lb)	Tension kN (lb)	Shear kN (lb)	Tension kN (lb)	Shear kN (lb)	Tension kN (lb)	Shear kN (lb)
M8	**65** (2 9/16)	**19.8** (4460)	**29.8** (6700)	**23.0** (5165)	**33.5** (7520)	**26.1** (5870)	**37.1** (8345)	**29.1** (6545)	**38.3** (8610)	**32.1** (7220)	**39.5** (8880)
M10	**75** (3)	**27.0** (6070)	**52.2** (11745)	**32.4** (7285)	**55.5** (12480)	**37.8** (8500)	**58.8** (13220)	**43.1** (9700)	**62.1** (13960)	**48.5** (10900)	**65.4** (14700)
M12	**80** (3 3/16)	**35.1** (7880)	**72.3** (16245)	**42.5** (9560)	**78.2** (17570)	**50.0** (11240)	**84.1** (18900)	**57.5** (12920)	**90.7** (20390)	**64.9** (14600)	**97.3** (21875)
M16	**105** (4 1/8)	**65.4** (14700)	**125.2** (28135)	**77.6** (17450)	**137.4** (30890)	**90.1** (20205)	**149.6** (33640)	**102.1** (22960)	**161.9** (36390)	**114.4** (25710)	**174.1** (39140)
M20	**130** (5 1/8)	**91.6** (20600)	**146.8** (33000)	**102.5** (23050)	**173.5** (39010)	**113.4** (25500)	**200.3** (45020)	**124.4** (27975)	**214.0** (48110)	**135.5** (30450)	**227.7** (51195)
M24	**155** (6 1/8)	**104.5** (23500)	**213.5** (48000)	**128.8** (28945)	**246.0** (55310)	**153.0** (34390)	**278.5** (62615)	**177.2** (39835)	**306.0** (68790)	**201.4** (45280)	**333.5** (74965)

Carbon Steel HSL, HSLG, HSL-I Metric Allowable Loads in Concrete [1,2]

Anchor Diameter	Embedment Depth mm (in.)	13.8 MPa (2000 psi)		20.7 MPa (3000 psi)		27.6 MPa (4000 psi)		34.5 MPa (5000 psi)		41.4 MPa (6000 psi)	
		Tension kN (lb)	Shear kN (lb)	Tension kN (lb)	Shear kN (lb)	Tension kN (lb)	Shear kN (lb)	Tension kN (lb)	Shear kN (lb)	Tension kN (lb)	Shear kN (lb)
M8	**65** (2 9/16)	**5.7** (1280)	**8.5** (1920)	**6.6** (1480)	**9.6** (2155)	**7.5** (1680)	**10.6** (2390)	**8.3** (1875)	**11.0** (2470)	**9.2** (2070)	**11.3** (2545)
M10	**75** (3)	**7.7** (1740)	**15.0** (3365)	**9.3** (2090)	**15.9** (3580)	**10.8** (2435)	**16.9** (3790)	**12.4** (2780)	**17.8** (4000)	**13.9** (3125)	**18.8** (4215)
M12	**80** (3 3/16)	**10.1** (2260)	**20.7** (4655)	**12.2** (2740)	**22.4** (5040)	**14.3** (3220)	**24.1** (5420)	**16.5** (3700)	**26.0** (5845)	**18.6** (4185)	**27.9** (6270)
M16	**105** (4 1/8)	**18.8** (4215)	**35.9** (8065)	**22.2** (5000)	**39.4** (8855)	**25.8** (5790)	**42.9** (9645)	**29.3** (6580)	**46.4** (10430)	**32.8** (7370)	**49.9** (11220)
M20	**130** (5 1/8)	**26.3** (5905)	**42.1** (9460)	**29.4** (6610)	**49.7** (11180)	**32.5** (7310)	**57.4** (12905)	**35.7** (8020)	**61.3** (13790)	**38.8** (8730)	**65.3** (14675)
M24	**155** (6 1/8)	**30.0** (6735)	**61.2** (13760)	**36.9** (8300)	**70.5** (15855)	**43.9** (9860)	**79.8** (17950)	**50.8** (11420)	**87.7** (19720)	**57.7** (12980)	**95.6** (21490)

1. For HSL-G, reduce the tabulated shear loads by 18% to account for shear plane acting through the threaded rods vs. unthreaded bolt.
2. For HSL-I, reduce the shear loads by 50%.

Note: Definition of Nomenclature

no letter – carbon steel
R – stainless steel
N – slot at rod end

Heavy Duty Expansion Anchor

HSLG-R M 12/25

Metric Thread size (mm): not hole diameter (see Specification Table on previous page)

Maximum fastened thickness (mm)

no letter – bolt
B – torque cap
G – stud
I – Internally threaded, flush mounted

Example: HSLG-RM12/25
This is an HSL stud anchor. The anchor material is type 316 Stainless Steel. The thread size is 12 mm and this anchor can attach up to a 25 mm thick plate.