HNR

STRUCTURAL CALCULATION COVER SHEET

Date: 10-16-01

1 of 13

Calculation No:3442.053.SCAL.008,
Calculation Title: LDCC EC1 EXTERIOR PIPE SUPPORTS
Project ID # 100256
Project Title: CCN CHILLED WATER SYSTEM OPTIMIZATION MASTER PLAN

ORIGINAL AND REVISED CALCULATION/ANALYSIS APPROVAL

	Rev. A Name/Signature/Date	Rev. 0 Name/Signature/Date	Rev._ Name/Signature/Date
Originator: DAVID APPLE	10/16/01	8-29-02	
Checked By: JIM WEEKS	10/16/01	8/29/02	
Approved By: JIM WEEKS	10/16/01	8/29/02	
Other:			

AFFECTED DOCUMENTS

Document Number	Document Title	Rev. Number
Drawing No. C52952	CCN Chilled Water System Optimization Master Plan	T1, M1-M33 Rev. B E1-E14 Rev. A
Drawing No. C52952	CCF/LDCC Cooling Plant Modifications	Rev.0
Drawing No. C53110	LDCC EC-1 Modifications	Rev.0

Record of Revision

Rev.	Reason for Revision
REV A	FIRST SUBMITTAL OF CALCULATIONS
Rev.0	All pages of this calculation 3442.053.SCAL.008 Rev.A are considered Rev. 0, approved and released based upon no technical changes to the calculation during/after review.

HNR Holmes & Narver | Raytheon **STRUCTURAL DESIGN CALCULATION SHEET**	Project Title: CCN CHILLED WATER SYSTEM OPTIMIZATION MASTER PLAN Project ID #100256 Task Order # 053 2 of 13
Calculation No. 3442.053.SCAL.008	PERFORMED BY : _____ 10/16/01 DAVID APPLE
Rev. No. A	CHECKED BY : _____ 10/16/01 JIM WEEKS
Calculation Title: LDCC EC1 EXTERIOR PIPE SUPPORTS	

INTRODUCTION

Purpose: Provide calculations and details for 2 - 4" diameter pipes spanning between LDCC and EC1.

Scope: Design and detail pipe supports to carry 2 - 4" diameter pipes, which will be supported from two existing pipe support structures.

DESIGN BASIS

Design Inputs: The LDCC facility is considered a Performance Category (PC) 1 facility. Pipe and associated component weights provided by Mechanical Engineer and from manufacturers printed information.

Criteria: LANL Facility Engineering Manual, Chapter 5 (Ref. 1)
LANL Specification Section 13085, Seismic Protection (Ref. 2)

Assumptions: The existing pipe support structures between LDCC and EC1 have adequate strength capacity to carry the additional loads imposed by the additional 2 - 4" diameter pipes as specified in this project.

REFERENCES

(1) LANL Facility Engineering Manual, Chapter 5
(2) LANL Specification Section 13085, Seismic Protection
(3) ASCE 7-98
(4) AISC Manual of Steel Construction, 9th Edition
(5) IBC 2000
(6) DOE-STD-1020-94

METHODS: Hand calculations were used to prepare these calculations.

RESULTS AND CONCLUSIONS: Design calculations and details have been provided to support the piping to be added between LDCC and EC1 as specified for this project.

HNR
Holmes & Narver | Raytheon

CALCULATION CHECKLIST

Task/Project #: 100256
Task Order 053
CCN CHILLED WATER SYSTEM OPTIMIZATION MASTER PLAN

Calculation Number: 3442.053.SCAL.008 3 of 13 | Revision A

Reviewer/Checker : JIM WEEKS

Reviewer performed or supervised subject calculation.
_____NO _X_YES Justification Attachment _____, _____ pages

Alternate Verification method approved _____ Method _____

Date 10/15/01

ITEM(S) CHECKED	Accept Y/N	OBJECTIVE EVIDENCE Sheets		INITIAL/ DATE
1. Cover forms properly completed.	Y			10/15
2. Calculation Sheet headers complete with calc. no., rev., etc.	Y			10/15
3. Calculation Sheet contents complete per format.	Y			10/15
4. Listed attachments included.	Y			10/15
5. Calculation Objective clearly described.	Y			10/15
6. Criteria are suitable and properly referenced to task-specific documents.	Y			10/15
7. Assumptions and data described and attached or referenced to task documents.	Y			10/15
8. Calculation method identified and appropriate for the design activity.	Y			10/15
9. Calculation results reasonable and correctly described in Results and Conclusions.	Y			10/15
10. Computer Program identified with version and revision.	N/A			
11. Computer Program references method used, etc.	N/A			
12. Computer input/output provided.	N/A			
13. Computer run traceable to calculation.	N/A			
14. Computer input data within permissible design input range.	N/A			
15. Computer Program validation/verification addressed.	N/A			

REMARKS

Checker Print Name & Sign
JIM WEEKS

Date 10/15/01

Preparer Print Name & Sign
DAVID APPLE

Date 10-16-01

CHECKED _____ DATE 10/15/01

APPROVED _____ DATE 10/15/01

Holmes & Narver
ARCHITECTS - ENGINEERS
6501 Americas Parkway NE Suite 700
Albuquerque, NM 87110

JOB NO. 034103442.0053
3442.053.SCAL.008 Rev. A
SHEET 4 OF 14

TITLE LDCC ECI EXTERIOR PIPE SUPPORT
CCN CHILLED WATER SYSTEM OPTIMIZATION MASTER PLAN

BY DAA DATE 10-12-01

#100256

The existing pipe bridge structures between LDCC and ECI are, by inspection, adequate to carry the additional loads imposed by 2 - 4" dia pipes associated with this project.

The structure is built from TS 4x4x - sections, and currently supports one 20" dia pipe.

The new pipe will be attached to the existing support immediately adjacent to the LDCC exterior wall, ⇒ minimal impact on loading, since wall penetration is adjacent to support.

Similarly, the pipe will penetrate the North wall of the ECI structure adjacent to the existing pipe support structure.

∴ Existing structure is adequate to carry 2 ~ 4"Ø pipes.

Use TS for new support to match existing, and pipe roll stands to allow pipe movement.

FORM 8X8

CHECKED _____ DATE 12/15/01

APPROVED _____ DATE 12/15/01

Holmes & Narver
ARCHITECTS - ENGINEERS
6501 Americas Parkway NE Suite 700
Albuquerque, NM 87110

JOB NO. 03410 3442.0053
3442.053-SCAL.008 REV.A
SHEET 5 OF 14

TITLE LDCC ECI EXTERIOR PIPE SUPPORTS BY DAA DATE 10-10-01
CCN CHILLED WATER SYSTEM OPTIMIZATION MASTER PLAN

#100256

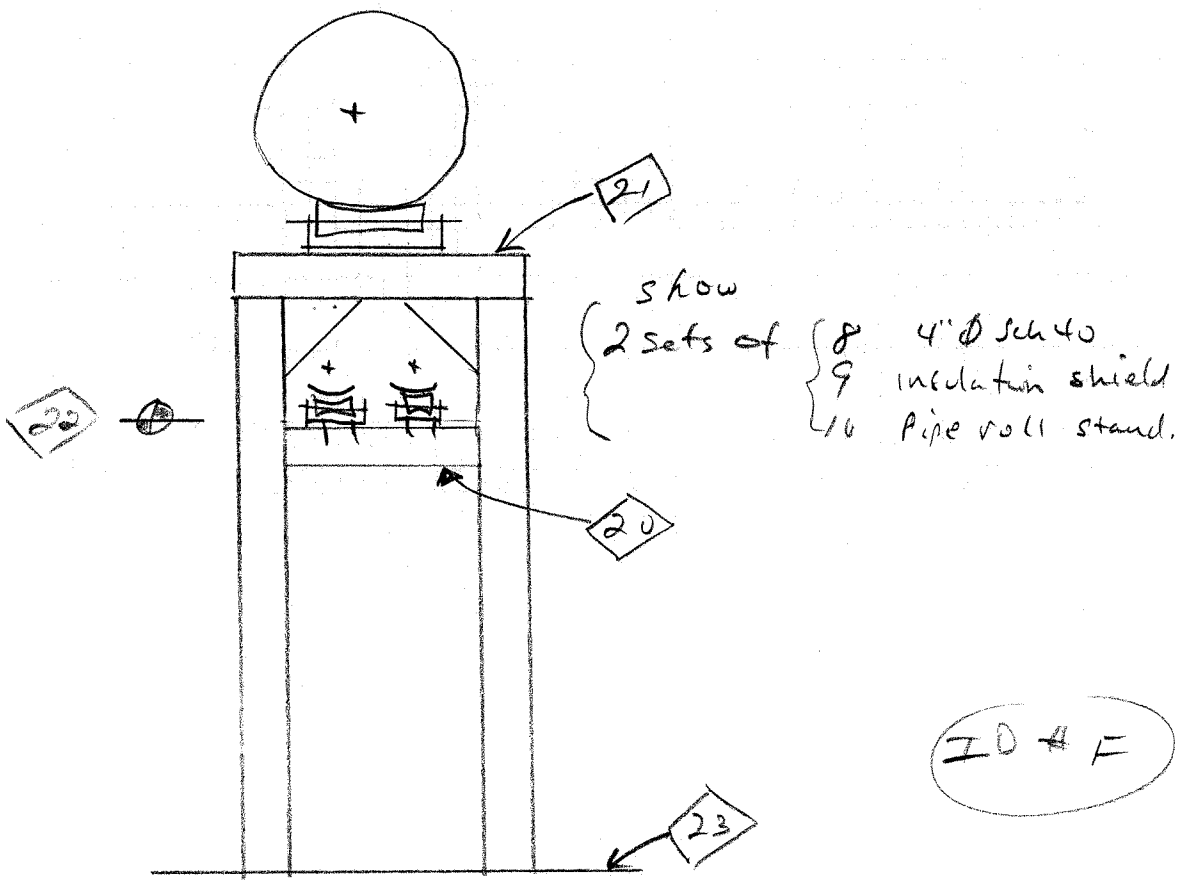

20. FIELD WELD TS 4x4x3/8" HORIZONTAL MEMBER TO EXISTING PIPE BRIDGE SUPPORT STRUCTURE

21. EXISTING PIPE BRIDGE SUPPORT STRUCTURE

22. ELEVATION TO MATCH ELEVATION OF LDCC WALL PENETRATION OR ECI WALL PENETRATION. VARIES.

23. CONCRETE SIDEWALK OR STRUCTURE SUPPORT FOUNDATION.

FORM 8X8

CHECKED _____ DATE 10/15/01

APPROVED _____ DATE 10/15/01

Holmes & Narver
ARCHITECTS - ENGINEERS
6501 Americas Parkway NE Suite 700
Albuquerque, NM 87110

JOB NO. 034103442.0053
3442.053.SCAL.008 REV. A
SHEET 6 OF 14

TITLE LDCC EC-1 EXTERIOR PIPE SUPPORTS
CCN CHILLED WATER SYSTEM OPTIMIZATION MASTER PLAN

BY DAA DATE 10-10-01

#100256

For sheet M8, Locations ① - ⑨ are identified. The following table identifies the pipe support to be used.

As shown in calcs

Per M8 Location	# of 4"Ø Pipes	ID of detail	Description
1	1	B	Support from existing member
2	2	E	" " " "
3	2	A	" " new framing member
4	2	C	Support from existing member
5	2	D	" " " "
6	2	C	" " " "
7	2	D	" " " "
⊛ 8	2	F	Support from existing outdoor pipe bridge
⊛ 9	2	F	" " " " " "

⊛ these locations are outside LDCC.
SEE 3442.053.SCAL.008 FOR DETAILS.

FORM 8X8

Holmes & Narver
Architects – Engineers
6501 Americas Parkway NE Suite 700
Albuquerque, NM 87110

CHECKED DATE 10/15/01 JOB NO. 3442.053.SCAL.008
Rev. A

APPROVED DATE 10/15/01 SHEET 1 OF 8

BY DAA DATE 10-15-01

TITLE LDCC EC1 Exterior pipe Support
#100256 CHILLED WATER SYSTEM OPTIMIZATION MASTER PLAN

APPENDIX

Drawing No. C52952, Sheet M8	1 page
AISC ASD 9th Edition, p. 1-96, Structural Tubing, Square	1 page
Grinnell Pipe Hangers	4 pages
Drawing No. C52952, Sheet M16	1 page

8

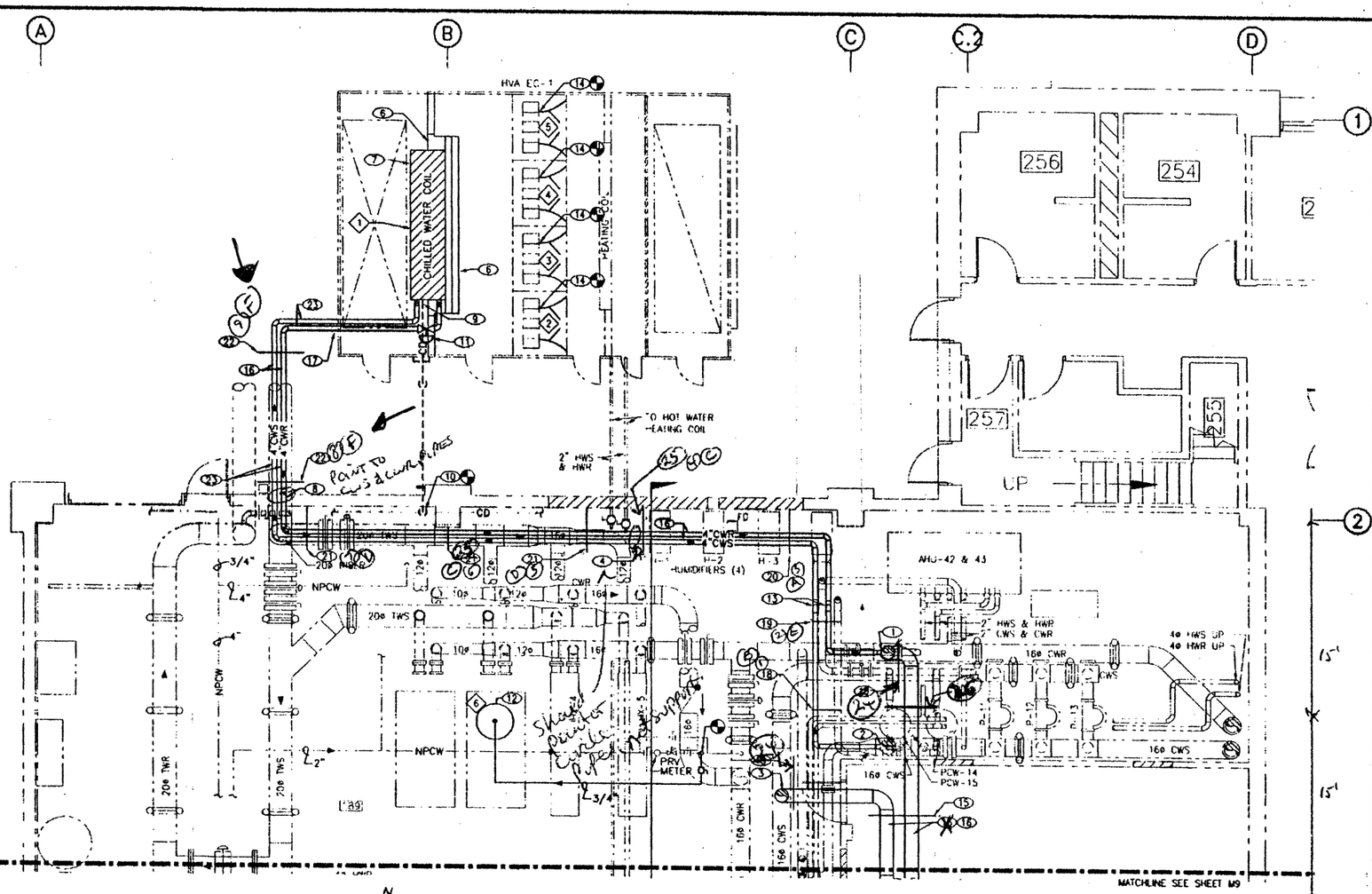

CHILLED WATER PIPING AND HVAC PLAN – AREA A
SCALE: 1/4"=1'-0"

KEYED NOTES

1. SEE DETAIL 3/M17 FOR CWR CONNECTION DETAIL.
2. SEE DETAIL 4/M17 FOR CWS CONNECTION DETAIL.
3. HOT TAP THE CWS WITH A 12"ø. INSTALL A 12"ø VALVE AND EXTEND CWS PIPING AS SHOWN. SEE DETAIL 5/M17 MEZZANINE FRAMING
4. ROUTE CWS AND CWR PIPING UP ON TOP OF STRUCTURE. SEE DETAIL 2/M16.
5. NOT USED
6. INSTALL 14GA. SHEET METAL BLANK DOWN STREAM OF INACTIVE PORTION OF COIL FACE DAMPERS.
7. INSTALL CHILLED WATER COILAND COIL CASING. SEE DETAIL 1/M17 AND 2/M17 FOR PROCEDURE.
8. CORE DRILL AND SLEEVE 4"ø CHILLED WATER SUPPLY AND RETURN PIPING THROUGH WALL. SEAL OPENING WITH LINK SEAL OR EQUIVALENT. INSTALL ESCUTIONS ON BOTH SIDES OF WALL FOR EACH PIPE.
9. ROUTE 1-1/2" CONDENSATE DRAIN FROM COIL DRAIN PAN SUMP PUMP UP TO BOTTOM OF PIPE 10'-0".
10. ROUTE CONDENSATE DRAIN UP 85" ABOVE GRADE. SLOPE DRAIN PIPE TOWARD BUILDING. SLEEVE PIPE THROUGH WALL. SEAL WALL PENETRATION WITH LINK SEAL. DROP CONDENSATE DRAIN PIPING DOWN AND CONNECT TO EXISTING 1-1/2"ø DRAIN PIPE.
11. INSTALL MODULATING TWO WAY CONTROL VALVE. SEE CONTROL DRAWINGS.
12. INSTALL CHILLED WATER EXPANSION TANK ON EXISTING CONCRETE PAD AND ANCHOR IN PLACE. SET PRESSURE AT 25 PSIG.
13. DROP PIPE DOWN TO WITHIN 12" OF TOP OF MEZZANINE LATTICE.
14. INSTALL NEW INLET CONE WITH INLET VANE DAMPERS. INSTALL IN ACCORDANCE WITH THE MANUFACTURERS INSTRUCTIONS. FURNISH AND INSTALL PNEUMATIC ADAPTER WITH EACH DAMPER.
15. SEE STRUCTURAL DETAIL 4/M15 FOR PIPE SUPPORT AND SEISMIC RESTRAINT REQUIREMENTS.

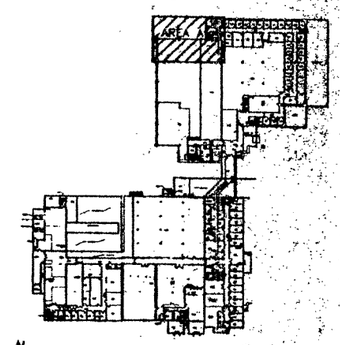

KEYPLAN
SCALE: NONE

NOT FOR CONSTRUCTION

KEYED NOTES (CONT.)

16. INSULATE PIPING. SEE SPECIFICATIONS.
17. SUPPORT PIPING AT WALL OF UNIT EC-1 USING P-1000 UNISTRUT AND CLAMPS. SEAL PIPE PENETRATIONS WITH EXTERIOR TYPE CAULKING.
18. SUPPORT PIPING ~~AT WALL~~. SEE STRUCTURAL DETAIL 1/M16 (B) FROM EXISTING STRUCTURE
19. SUPPORT PIPING ~~AT WALL~~. SEE STRUCTURAL DETAIL 4/M16 (E) FROM EXISTING STRUCTURE
20. SUPPORT PIPING ~~AT WALL~~. SEE STRUCTURAL DETAIL 4/M15 (A) OK AS IT WAS — 2/M15 (A)
21. SUPPORT PIPING ~~AT WALL~~. SEE STRUCTURAL DETAIL 3/M16 (D)
22. SUPPORT PIPING ~~AT WALL~~. SEE STRUCTURAL DETAIL 5/M16 (F) FROM EXISTING PIPE BRIDGE STRUCTURE
23. INSTALL HEAT CABLE ON EXTERIOR CWR AND CWS CHILLED WATER PIPING. COORDINATE WITH DIVISION 16.

0' 1' 2' 4' 6' 8'
1/4"=1'-0"

24. SEE STRUCTURAL DETAIL 5/M15 FOR PIPE SUPPORT AND SEISMIC RESTRAINT REQUIREMENTS
25. SUPPORT PIPING FROM EXISTING STRUCTURE. SEE STRUCTURAL DETAIL 2/M16 (C)
26. SEE NOTE 15 except provide only 1 pipe roll stand for 12" DIA PIPE.

REV	DATE	CLASS REV	REVISIONS	DRN	DES	CHKD	QA	APP
B	10/5/01		90% "IN-HOUSE REVIEW"	RC	MS	DD		
A	9/18/01		60% "IN-HOUSE REVIEW"	RC	MS	DD		

HOLMES & NARVER/RAYTHEON (HNR)
HOLMES & NARVER/RAYTHEON ENGINEERS & CONSTRUCTORS
CLAVER-SMITH COMPUTING ENGINEERS
BOUGERS & TASTON CONSULTING ENGINEERS

CCN CHILLED WATER SYSTEM OPTIMIZATION MASTER PLAN
MECH: CHILLED WATER PIPING AND HVAC PLAN – AREA A

BLDG. 1498 & 132 TA-3

SUBMITTED DWIGHT DORSEY
APPROVED FOR HNR DOUG METZLE

Los Alamos
LOS ALAMOS NATIONAL LABORATORY
LOS ALAMOS, NEW MEXICO, USA

SHEET M8

PROJECT ID 100256
DRAWING NO. C52852
REV B

ENGINEER'S SEAL

Cad File Name: M:\C0100.DR\cad\sheet\
Cad File Path: M:\C0100.DR\cad\sheet\
Date Plotted: 10/11/01
Time Plotted: 11:00:37
Login Initials: rjp

14

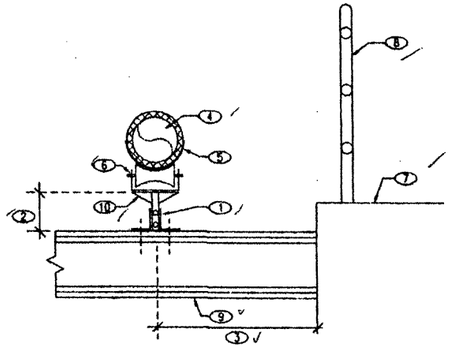

1. POST BASE P2072A UNISTRUT (OR APPROVED EQUAL), TYPICAL. ANCHOR TO SUPPORT MEMBER PER MANUFACTURERS RECOMMENDATIONS.
2. ADJUST LENGTH OF P1000 UNISTRUT POST TO PROVIDE 12 INCHES FOR THIS DIMENSION.
3. FIELD VERIFY.
4. 4" DIA. SCH. 40 STEEL PIPE AND INSULATION.
5. INSULATION PROTECTION SADDLE TYPICAL.
6. PIPE ROLL STAND, GRINNELL FIG. 271 OR APPROVAL EQUAL.
7. 2ND FLOOR CONCRETE.
8. EXISTING RAILING.
9. EXISTING DRYWALL COVERED FRAMMING MEMBER.
10. UNISTRUT P1000 POST AND UNISTRUT P2348 WING SHAPE FITTING, OR APPROVED EQUAL.

PIPE SUPPORT FOR ~~SINGLE~~ ONE 4" DIAMETER PIPE

SCALE: NONE

1 / MB (B)

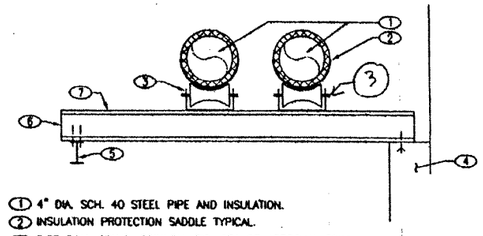

1. 4" DIA. SCH. 40 STEEL PIPE AND INSULATION.
2. INSULATION PROTECTION SADDLE TYPICAL.
3. PIPE ROLL STAND, GRINNELL FIG. 271 OR APPROVAL EQUAL.
4. EXISTING FRAMING MEMBER ALONG NORTH WALL OF LDCC. FIELD VERIFY ANCHORING METHOD & VERIFY WITH PROJECT ENGINEER.
5. EXISTING CHORD BRACING, ~~FRAMING~~ MEMBERS.
6. EXISTING BACK-TO-BACK CHANNEL MEMBERS.
7. EXISTING PIPING, VARIES

MOUNTED TO CHANNEL MEMBERS

FRAMING

PIPE SUPPORT - 4" DIAMETER PIPES.

SCALE: NONE

3 / MB (D)

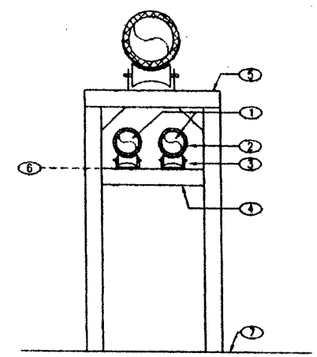

1. 4" DIA. SCH. 40 STEEL PIPE AND INSULATION.
2. INSULATION PROTECTION SADDLE, TYPICAL.
3. PIPE ROLL STAND, GRINNELL FIG. 271 OR APPROVAL EQUAL, TYPICAL.
4. FIELD ~~VERIFY~~ WELD TS 4x4x3/8" HORIZONTAL MEMBER TO EXISTING PIPE BRIDGE SUPPORT STRUCTURE.
5. EXISTING PIPE BRIDGE SUPPORT STRUCTURE.
6. ELEVATION TO MATCH ELEVATION OF LDCC WALL PENETRATION OR EC-1 WALL PENETRATION.
7. CONCRETE SIDEWALK OR STRUCTURE SUPPORT FOUNDATION.

PIPE SUPPORT

SCALE: NONE

5 / MB (F)

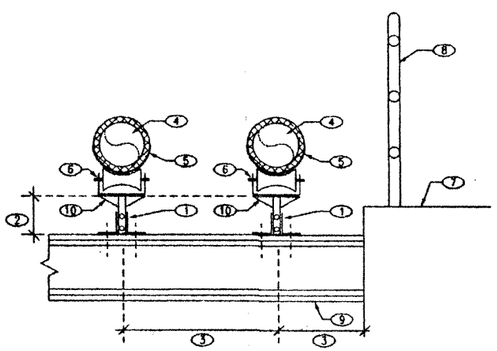

1. POST BASE P2072A UNISTRUT (OR APPROVED EQUAL), TYPICAL. ANCHOR TO SUPPORT MEMBER PER MANUFACTURERS RECOMMENDATIONS.
2. ADJUST LENGTH OF P1000 UNISTRUT POST TO PROVIDE 12 INCHES FOR THIS DIMENSION.
3. FIELD VERIFY.
4. 4" DIA. SCH. 40 STEEL PIPE AND INSULATION.
5. INSULATION PROTECTION SADDLE TYPICAL.
6. PIPE ROLL STAND, GRINNELL FIG. 271 OR APPROVAL EQUAL.
7. 2ND FLOOR CONCRETE.
8. EXISTING RAILING.
9. EXISTING DRYWALL COVERED FRAMMING MEMBER.
10. UNISTRUT P1000 POST AND UNISTRUT P2348 WING SHAPE FITTING, OR APPROVED EQUAL.

PIPE SUPPORT FOR ~~DOUBLE~~ TWO 4" DIAMETER PIPES

SCALE: NONE

2 / MB (C)

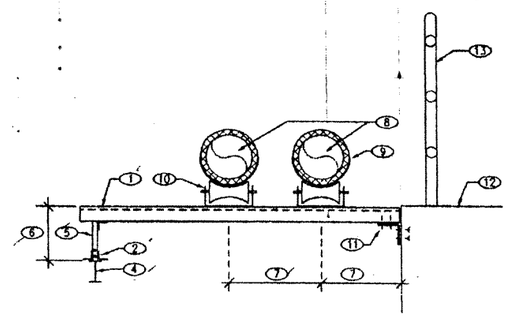

1. P5000 UNISTRUT (OR APPROVED EQUAL).
2. POST BASE P2072A UNISTRUT (OR APPROVED EQUAL), TYPICAL. ANCHOR TO SUPPORT MEMBER PER MANUFACTURERS RECOMMENDATIONS.
3. ~~BY 4 TRUSS EXISTING DRYWALL COVERING MEMBER, NOT SHOWN.~~ USED.
4. W 8x28 MEZZANINE FRAMING MEMBER. DRYWALL COVERING MEMBER, NOT SHOWN.
5. P1000 UNISTRUT POST AND P1325 90° FITTING. TYPICAL
6. ADJUST LENGTH OF P1000 UNISTRUT POST TO PROVIDE 12 INCHES FOR THIS DIMENSION.
7. FIELD VERIFY.
8. 4" DIA. SCH. 40 STEEL PIPE AND INSULATION.
9. INSULATION PROTECTION SADDLE, TYPICAL.
10. PIPE ROLL STAND, GRINNELL FIG. 271 OR APPROVAL EQUAL.
11. UNISTRUT P1225 90° FITTING SECURED WITH 2 HILTI HSL M 12/50 HEAVY DUTY EXPANSION ANCHORS (ITEM NO. 00066593) AND 2-1/2" DIA. BOLTS. FIELD VERIFY AND NOTIFY PROJECT ENGINEER OR PROJECT MANAGER IF CONDITION VARIES.
12. 2ND FLOOR - CONCRETE.
13. EXISTING RAILING.

PIPE SUPPORT

SCALE: NONE

4 / MB (E)

~~PIPE SUPPORT~~ ~~SCALE: NONE~~ ~~6 / MB~~

NOT FOR CONSTRUCTION

REV.	DATE	CLASS. REV.	REVISION	DRN.	DES.	CHK.	CLS.	APP.
B	10/5/01		90% "IN-HOUSE REVIEW"	RC	MS	DD		
A	9/18/01		60% "IN-HOUSE REVIEW"	RC	MS	DD		

HOLMES & NARVER/RAYTHEON (HNR)

HOLMES & NARVER/RAYTHEON ENGINEERS & CONSTRUCTORS
CRAVEN-GIBBETTS CONSULTING ENGINEERS
BUCHANAN & PARTNER CONSULTING ENGINEERS

CCN CHILLED WATER SYSTEM OPTIMIZATION MASTER PLAN

MECH: DETAILS

DRAWN: A. CONTI
DESIGN: H. SCHAUB
CHECKED: M. DORSEY
DATE: 10/5/01

BLDG. 1498 & 132 TA-3

SUBMITTED: DWIGHT DORSEY
APPROVED FOR RELEASE: DOUG HOTLE

Los Alamos — Los Alamos National Laboratory, Los Alamos, New Mexico 87545

SHEET M16 OF

CLASSIFICATION: UNCLASSIFIED

PROJECT ID: 100256

DRAWING NO.: C52952

REV: B

ENGINEER'S SEAL

Date Plotted: 10/11/01 Time Plotted: 0621:38 Login Initials: rgc

Cad File Name: 100256M16.dwg

Cad File Path: H:\100256\M\cad\hvac\

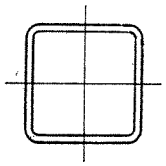

STRUCTURAL TUBING
Square
Dimensions and properties

Dimensions				Properties**					
Nominal* Size	Wall Thickness		Weight per Ft	Area	I	S	r	J	Z
In.	In.		Lb.	In.^{2}	In.^{4}	In.^{3}	In.	In.^{4}	In.^{3}
4.5×4.5	0.2500	¼	13.91	4.09	12.1	5.36	1.72	19.7	6.43
	0.1875	3/16	10.70	3.14	9.60	4.27	1.75	15.4	5.03
4×4	0.5000	½	21.63	6.36	12.3	6.13	1.39	21.8	8.02
	0.3750	⅜	17.27	5.08	10.7	5.35	1.45	18.4	6.72
	0.3125	5/16	14.83	4.36	9.58	4.79	1.48	16.1	5.90
	0.2500	¼	12.21	3.59	8.22	4.11	1.51	13.5	4.97
	0.1875	3/16	9.42	2.77	6.59	3.30	1.54	10.6	3.91
3.5×3.5	0.3125	5/16	12.70	3.73	6.09	3.48	1.28	10.4	4.35
	0.2500	¼	10.51	3.09	5.29	3.02	1.31	8.82	3.70
	0.1875	3/16	8.15	2.39	4.29	2.45	1.34	6.99	2.93
3×3	0.3125	5/16	10.58	3.11	3.58	2.39	1.07	6.22	3.04
	0.2500	¼	8.81	2.59	3.16	2.10	1.10	5.35	2.61
	0.1875	3/16	6.87	2.02	2.60	1.73	1.13	4.28	2.10
2.5×2.5	0.3125	5/16	8.45	2.48	1.87	1.50	0.868	3.32	1.96
	0.2500	¼	7.11	2.09	1.69	1.35	0.899	2.92	1.71
	0.1875	3/16	5.59	1.64	1.42	1.14	0.930	2.38	1.40
2×2	0.3125	5/16	6.32	1.86	0.815	0.815	0.662	1.49	1.11
	0.2500	¼	5.41	1.59	0.766	0.766	0.694	1.36	1.00
	0.1875	3/16	4.32	1.27	0.668	0.668	0.726	1.15	0.840

*Outside dimensions across flat sides.
**Properties are based upon a nominal outside corner radius equal to two times the wall thickness.

STRUCTURAL TUBING
Rectangular
Dimensions and properties

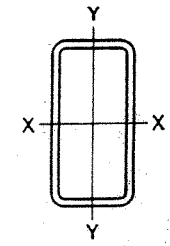

Dimensions				Properties**									
Nominal* Size	Wall Thickness		Weight per Ft	Area	X-X Axis				Y-Y Axis				J
					I_x	S_x	Z_x	r_x	I_y	S_y	Z_y	r_y	
In.	In.		Lb.	In.^{2}	In.^{4}	In.^{3}	In.^{3}	In.	In.^{4}	In.^{3}	In.^{3}	In.	In.^{4}
20×12	0.5000	½	103.30	30.4	1650	165	201	7.37	750	125	141	4.97	1650
	0.3750	⅜	78.52	23.1	1280	128	154	7.45	583	97.2	109	5.03	1270
	0.3125	5/16	65.87	19.4	1080	108	130	7.47	495	82.5	91.8	5.06	1070
20× 8	0.5000	½	89.68	26.4	1270	127	162	6.94	300	75.1	84.7	3.38	806
	0.3750	⅜	68.31	20.1	988	98.8	125	7.02	236	59.1	65.6	3.43	625
	0.3125	5/16	57.36	16.9	838	83.8	105	7.05	202	50.4	55.6	3.46	529
20× 4	0.5000	½	76.07	22.4	889	88.9	123	6.31	61.6	30.8	36.0	1.66	205
	0.3750	⅜	58.10	17.1	699	69.9	95.3	6.40	50.3	25.1	28.5	1.72	165
	0.3125	5/16	48.86	14.4	596	59.6	80.8	6.44	43.7	21.8	24.3	1.74	143
18× 6	0.5000	½	76.07	22.4	818	90.9	119	6.05	141	47.2	53.9	2.52	410
	0.3750	⅜	58.10	17.1	641	71.3	92.2	6.13	113	37.6	42.1	2.57	322
	0.3125	5/16	48.86	14.4	546	60.7	78.1	6.17	97.0	32.3	35.8	2.60	274
16×12	0.6250	⅝	110.36	32.4	1160	145	175	5.98	742	124	144	4.78	1460
	0.5000	½	89.68	26.4	962	120	144	6.04	618	103	118	4.84	1200
	0.3750	⅜	68.31	20.1	748	93.5	111	6.11	482	80.3	91.3	4.90	922
	0.3125	5/16	57.36	16.9	635	79.4	93.8	6.14	409	68.2	77.2	4.93	777
16× 8	0.5000	½	76.07	22.4	722	90.2	113	5.68	244	61.0	69.7	3.30	599
	0.3750	⅜	58.10	17.1	565	70.6	87.6	5.75	193	48.2	54.2	3.36	465
	0.3125	5/16	48.86	14.4	481	60.1	74.2	5.79	165	41.2	45.9	3.39	394
16× 4	0.5000	½	62.46	18.4	481	60.2	82.2	5.12	49.3	24.6	29.0	1.64	157
	0.3750	⅜	47.90	14.1	382	47.8	64.2	5.21	40.4	20.2	23.0	1.69	127
	0.3125	5/16	40.35	11.9	327	40.9	54.5	5.25	35.1	17.6	19.7	1.72	110
14×10	0.6250	⅝	93.34	27.4	728	104	127	5.15	431	86.2	101	3.96	885
	0.5000	½	76.07	22.4	608	86.9	105	5.22	361	72.3	83.6	4.02	730
	0.3750	⅜	58.10	17.1	476	68.0	81.5	5.28	284	56.8	64.8	4.08	564
	0.3125	5/16	48.86	14.4	405	57.9	69.0	5.31	242	48.4	54.9	4.11	477

*Outside dimensions across flat sides.
**Properties are based upon a nominal outside corner radius equal to two times the wall thickness.

APPLE 10

Grinnell®

Pipe Hangers

Catalog PH-98

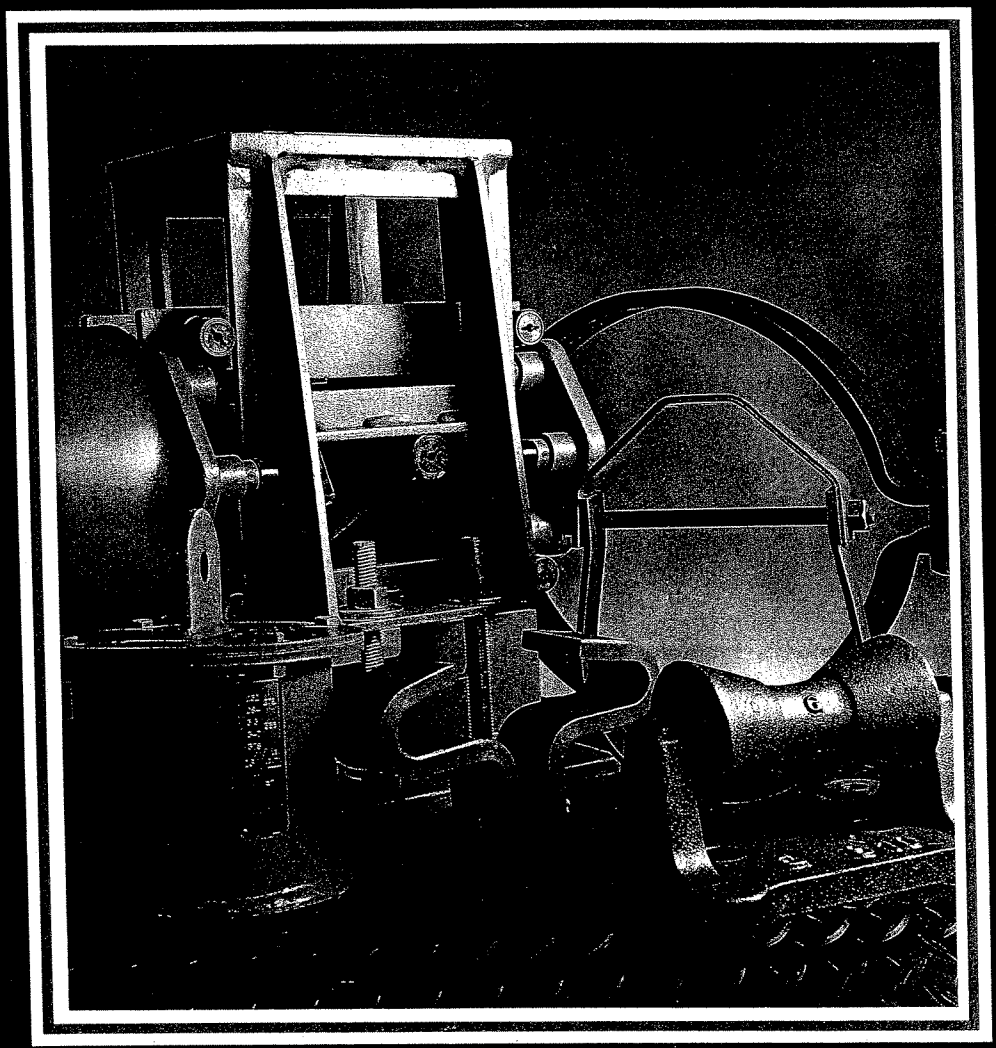

A tyco INTERNATIONAL LTD. COMPANY

pipe roll stand
complete: fig. 271
pipe roll and rod: fig. 272
pipe roll only: fig. 273

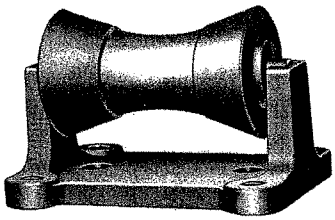

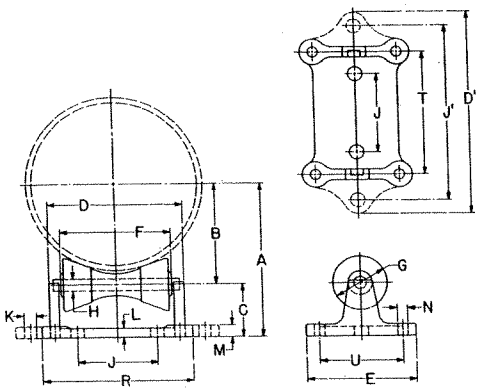

SIZE RANGE: 2 through 42 inch pipe.

MATERIAL: Cast iron roll and stand.

FINISH: Black or galvanized.

SERVICE: For support of pipe where longitudinal movement resulting from expansion and contraction may take place but vertical adjustment is unnecessary.

MAXIMUM TEMPERATURE: 450°F at roller.

APPROVALS: Complies with Federal Specification WW-H-171 E (Type 45) and Manufacturers Standardization Society SP-69 (Type 44).

INSTALLATION:

(1) Two cored holes "K" for anchorage bolts are provided on all sizes for fastening stands to welded stands, to welded steel brackets, structural supports, piers, floors, etc.

(2) In addition, cored holes "N" at the four corners of the stand are provided for anchorage purposes.

(3) The two cored holes "K" on sizes 2 to 6 inch are on outside of stand (see dotted lines and dimension J').

(4) On all other sizes, the holes "K" are inside of uprights (see dimension J).

HOW TO SIZE:

(1) If roll is to support bare pipe, select the size directly from nominal pipe size (see below).

(2) If used with pipe covering protection saddle, see pages ph-74-76 for size of pipe roll.

ORDERING: Specify pipe roll size, figure number, name. Be certain to order oversized rolls where insulation makes this necessary.

NOTE: Standard line of carbon steel base plates available.

loads • weights

pipe size	2 to 3½	4 to 6	8 to 10	12 to 14	16 to 20	24	30	36 to 42
max recom load, lb ■	390	950	2100	3075	4980	6100	7500	12000
complete, fig. 271: wgt (approx) lbs each	6.4	8.9	15.3	28.1	39.7	49.6	99.3	152.0
roll and rod, fig. 272: wgt (approx) lbs each	.9	13.5	5.3	10.1	15.7	19.5	33.9	59.0
roll only, fig. 273: wgt (approx) lbs each	.7	11.0	4.4	8.5	12.7	14.5	24.0	41.0

dimensions (inches)

pipe size	A	B	C	D	D'	E	F	G	H	J	J'	K	L	M	N	R	T	U
2 2½ 3 3½	3½ 3⅞ 4⅛ 4⅜	1¾ 2⅛ 2⅜ 2⅝	1¾	4	8⅜	5⅜	2¾	1⅞	½	...	6⅜	1	9/16	11/16	½	...	3 7/16	4
4 5 6	4 13/16 5 7/16 6 1/16	2¾ 3⅜ 4	2 1/16	5⅜	9⅞	5⅝	3¾	2 1/16	½	...	7⅞	1	¾	⅞	½	...	4 11/16	4¼
8 10	8 11/16 9 13/16	5¼ 6⅜	3 7/16	7¾	...	6⅝	6	3¼	¾	4	...	1	¾	⅞	⅝	8⅝	7	5
12 14	11⅜ 12	7½ 8⅛	3⅞	9⅞	...	7⅞	8	4	⅞	5¾	...	1	¾	⅞	¾	10 15/16	9 1/16	6
16 18 20	13⅝ 14⅝ 15⅝	9⅜ 10⅜ 11⅜	4¼	11¼	...	8⅝	9	4½	1⅛	6¾	...	1	⅞	1	13/16	12⅜	10¼	6½
24	17¾	13⅜	4⅜	12½	...	8⅝	10	4 7/16	1¼	7½	...	1	1	1⅛	13/16	13½	11⅜	6½
30	21⅞	16¾	5⅛	15¾	...	10¾	12½	5½	1¾	10	...	1	1¼	1½	1 1/16	17	14¼	8
36 42	25¾ 28⅞	20 23⅛	5¾	18¾	...	12	15	6⅜	2	12	...	1	1½	1¾	1 5/16	20	17	9

■ Based on roll and stand only

pipe covering protection saddle

for nominal thickness of covering:

1 inch: fig. 160
1½ inch: fig. 161
2 inch: fig. 162
2½ inch: fig. 163
3 inch: fig. 164
4 inch: fig. 165
4 inch (Alloy): fig. 165A
5½ inch (Alloy): fig. 166A

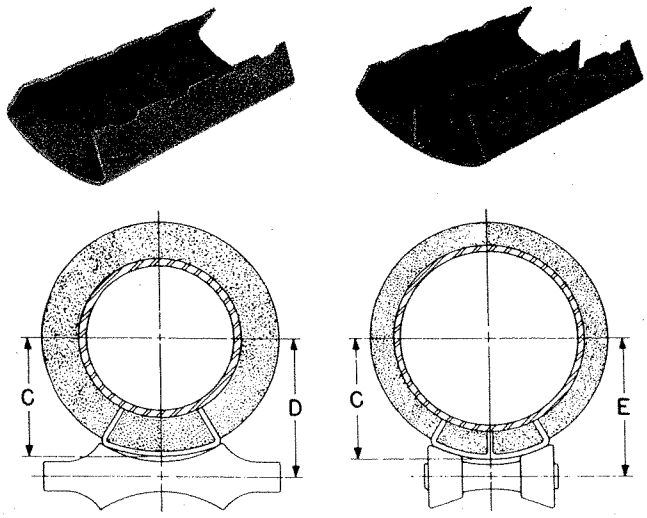

saddle with roll fig. 173 *saddle with roll fig. 273*

SIZE RANGE: For use with ¾ to 36 inch pipe.

MATERIAL: Figs. 160, 161, 162, 163, 164 and 165 are curved carbon steel plate. Figs. 165A and 166A are alloy steel manufactured from ASTM A-387 Grade 22 Chrome Molybdenum steel plate. Figs. 165A and 166A have a welded-in center plate in all sizes. All other saddles have a welded-in center plate for pipe sizes 12 inch and larger. All saddles are 12 inches long with side edges turned up.

SERVICE: Designed for high temperature service or where heat losses are to be kept at a minimum and to protect insulation against damage.

MAXIMUM TEMPERATURE: 650°F Carbon Steel, 950°F Alloy Steel.

APPROVALS: Complies with Federal Specification WW-H-171E (Type 40A or Type 40B) and Manufacturers Standardization Society SP-69 (Type 39A or Type 39B).

FEATURES: Permits finished, weathertight covering at all points of pipe support.

ORDERING: Specify pipe size, figure number, name. Data for 42 inch size available on request.

FINISH: Black.

loads • weights • dimensions (inches)

pipe size	fig. no.	max recom load, lbs	wgt (approx) lbs each	actual thickness of covering	size of pipe roll: figs. 171, 175 177	size of pipe roll: figs. 174, 181	size of pipe roll: figs. 271-277	center line of pipe to outside of saddle C	center line of pipe to center line of roll, D: figs. 171, 175 177	center line of pipe to center line of roll, D: figs. 174, 181	center line of pipe to center line of roll, E
¾	160•	1200	1.4	⅞	2	2½	2-3½	1⅝	2 1/16	2⅛	2¼
	161•	1200	2.1	1 7/16	3	3½	2-3½	2 3/16	2¾	2¾	2⅞
	162•	1200	2.8	1⅞	4	5	2-3½	2 11/16	3 5/16	3 5/16	3⅜
1	160•	1200	1.4	1 1/16	2½	3	2-3½	1 13/16	2 5/16	2¼	2 7/16
	161•	1200	2.1	1 9/16	3	4	2-3½	2 5/16	2⅞	2⅞	3
	162•	1200	2.8	2⅛	4	5	2-3½	2⅞	3½	3½	3½
1¼	160	1200	1.4	⅞	2½	3	2-3½	1 15/16	2½	2 7/16	2 9/16
	161•	1200	2.1	1⅝	3½	5	2-3½	2 9/16	3 1/16	3 1/16	3 3/16
	162•	1200	2.8	1 15/16	4	5	2-3½	3	3⅝	3⅝	3 11/16
	163•	1200	3.6	2 7/16	5	6	4-6	3¾	4⅜	4⅜	4⅜
1½	160	1200	1.5	1	3	3½	2-3½	2⅛	2⅝	2⅝	2 11/16
	161•	1200	2.1	1½	3½	5	2-3½	2⅝	3¼	3¼	3 5/16
	162•	1800	3.2	2 5/16	5	6	4-6	3 5/16	4	4	3⅞
	163•	1800	3.6	2 13/16	6	8	4-6	3⅞	4½	4⅝	4½
2	160	1200	1.7	1 1/16	3½	4	2-3½	2⅜	3	2 15/16	3 1/16
	161•	1200	2.3	1 9/16	4	5	2-3½	2⅞	3½	3½	3 9/16
	162•	1800	3.2	2⅛	5	6	4-6	3 9/16	4¼	4¼	4 3/16
	163•	1800	3.6	2⅝	6	8	4-6	4 1/16	4¾	4 13/16	4¾
	164•	1800	4.5	3⅛	8	8	4-6	4 9/16	5⅜	5⅜	5¼

continued next page

■ Maximum recommended loads are applicable only when saddle is used on a flat bearing surface and tack welded to pipe. When saddle is used with a pipe roll, the maximum load for the assembly is the smaller of the two loads.
• Saddles may require notching when used with a U-bolt.

Grinnell

protection saddle

13

loads • weights • dimensions (inches) *(continued)*

pipe size	fig. no.	max recom load, lb■	wgt (approx) lbs each	actual thickness of covering	size of pipe roll: figs. 171, 175 177	size of pipe roll: figs. 174, 181	size of pipe roll: figs. 271-277	center line of pipe to outside of saddle, C	center line of pipe to center line of roll, D: figs. 171, 175 177	D: figs. 174, 181	E
2½	160	1200	1.7	1 1/16	3½	5	2- 3½	2 11/16	3¼	3¼	3 5/16
	161•	1200	2.8	1⅞	5	6	4- 6	3 5/16	4	4	3 15/16
	162•	1200	3.2	2 5/16	6	8	4- 6	3⅞	4½	4⅝	4½
	163•	1200	4.1	2⅞	8	8	4- 6	4¼	5⅛	5⅛	5
	164•	1200	4.5	3⅜	8	10	4- 6	4⅞	5⅝	5¾	5½
3	160	1200	1.9	1	4	5	2- 3½	2 15/16	3½	3½	3 9/16
	161	1200	2.8	1 9/16	5	6	4- 6	3⅝	4 5/16	4 5/16	4¼
	162•	1200	3.6	2 1/16	6	8	4- 6	4⅛	4 13/16	4 13/16	4 11/16
	163•	1200	4.1	2 9/16	8	8	4- 6	4 11/16	5 7/16	5 7/16	5 5/16
	164•	1200	4.9	3 1/16	8	10	8-10	5 1/16	6	6	6 1/16
3½	160	1200	2.3	1¼	5	6	4- 6	3 5/16	4	4	3 15/16
	161	1200	3.2	1 13/16	6	8	4- 6	3 11/16	4 9/16	4 9/16	4½
	162•	1200	3.6	2¼	8	8	4- 6	4 5/16	5⅛	5⅛	5
	163•	1200	4.5	2¾	8	10	8-10	4 11/16	5⅝	5⅝	5 11/16
	164•	1200	4.9	3 5/16	10	10	8-10	5⅜	6 5/16	6 5/16	6⅜
4	160	1200	2.3	1 1/16	5	6	4- 6	3 9/16	4¼	4¼	4 3/16
	161	1200	3.2	1 9/16	6	8	4- 6	4 1/16	4⅞	4⅞	4¾
	162	1200	3.6	2 1/16	8	8	4- 6	4 9/16	5⅜	5⅜	5¼
	163	1200	4.5	2 9/16	8	10	8-10	5	5 15/16	5 15/16	6
	164•	1200	4.9	3 1/16	10	10	8-10	5⅝	6 9/16	6 9/16	6⅝
	165•	1200	6.1	4 1/16	10	12	12-14	6½	7⅝	7⅝	7 9/16
	165A•	7200	11.6	4 1/16	10	12	12-14	6½	7⅝	7⅝	7 9/16
	166A•	7200	15.7	5 11/16	14	16	12-14	8⅛	9⅝	9½	9 5/16
5	160	1200	2.3	1	6	8	4- 6	4⅛	4 13/16	4 13/16	4¾
	161	1200	3.2	1½	8	8	4- 6	4 11/16	5½	5½	5⅜
	162	1200	3.6	2	8	10	8-10	5 3/16	6	6 1/16	6⅛
	163	1200	4.5	2 9/16	10	10	8-10	5⅝	6 9/16	6 9/16	6⅝
	164	1200	4.9	3 1/16	10	12	8-10	6 3/16	7⅛	7¼	7¼
	165•	1200	6.1	4 3/16	12	14	12-14	7⅛	8 3/16	8⅜	8 3/16
	165A•	7200	11.6	4 3/16	12	14	12-14	7⅛	8⅛	8⅜	8 3/16
	166A•	7200	15.7	5 11/16	16	16	12-14	8 11/16	10 1/16	10 1/16	9⅞
6	160	1800	3.8	1	8	8	4- 6	4½	5⅜	5⅜	5¼
	161	1800	4.4	1½	8	10	8-10	5 1/16	5⅞	5 11/16	6
	162	1800	5.7	2	10	10	8-10	5½	6 7/16	6 7/16	6½
	163	1800	6.5	2½	10	12	8-10	6 3/16	7⅛	7 3/16	7¼
	164	1800	7.7	3	12	12	8-10	6 9/16	7⅝	7⅝	7⅝
	165•	1800	10.2	4⅛	14	16	12-14	7 9/16	9	9	8¾
	165A•	7200	12.9	4⅛	14	16	12-14	7⅝	9⅛	9	8 13/16
	166A•	7200	16.3	5⅝	16	18	16-20	9⅛	10⅝	10 9/16	10 7/16
8	161	1800	5.8	1½	10	12	8-10	6	7 1/16	7 1/16	7 1/16
	162	1800	6.3	2	10	12	8-10	6½	7 9/16	7 9/16	7 9/16
	163	1800	7.2	2 11/16	12	14	8-10	7¼	8 5/16	8½	8 5/16
	164	1800	7.7	3⅛	14	16	12-14	7 11/16	9	9	8¾
	165	1800	10.2	4 3/16	16	18	16-20	8 11/16	10⅛	10⅛	9⅞
	165A	7200	16.9	4 3/16	16	18	16-20	8 11/16	10 1/16	10⅛	9⅞
	166A•	7200	22.6	5⅝	18	20	16-20	10¼	11⅞	11 13/16	11⅝
10	161	1800	5.8	1 9/16	12	14	8-10	7¼	8 5/16	8½	8 5/16
	162	1800	7.7	2 1/16	14	16	12-14	7⅝	9 1/16	9	8 13/16
	163	1800	8.2	2 9/16	14	16	12-14	8⅛	9 9/16	9 9/16	9 5/16
	164	1800	8.8	3 1/16	16	18	16-20	8 11/16	10⅛	10 1/16	10
	165	1800	10.8	4 1/16	18	20	16-20	9¾	11¼	11¼	11⅛
	165A	7200	18.9	4 1/16	18	20	16-20	9 11/16	11 5/16	11¼	11⅛
	166A•	7200	24.3	5 9/16	20	...	22-24	11⅛	12 15/16	...	12½

continued next page

■ Maximum recommended loads are applicable only when saddle is used on a flat bearing surface and tack welded to pipe. When saddle is used with a pipe roll, the maximum load for the assembly is the smaller of the two loads.
• Saddles may require notching when used with a U-bolt.