HNR

STRUCTURAL CALCULATION COVER SHEET

Date: 7-6-02

Page 1

Calculation No:3442.053.SCAL.009
Calculation Title: LDCC 2ND FLOOR EQUIPMENT SUPPORT
Project ID # 100256
Project Title: CCN CHILLED WATER SYSTEM OPTIMIZATION MASTER PLAN

ORIGINAL AND REVISED CALCULATION/ANALYSIS APPROVAL

	Rev. A Name/Signature/Date	Rev. 0 Name/Signature/Date	Rev._ Name/Signature/Date
Originator: DAVID APPLE	07/06/02	8-29-02	
Checked By: JEFFREY FREELAND	7/11/02	8/30/02	
Approved By:	/ /02	8/29/02	
Other:			

AFFECTED DOCUMENTS

Document Number	Document Title	Rev. Number
Drawing No. C52952	CCF/LDCC COOLING PLANT MODIFICATIONS	REV. 0
Drawing No. C53116	LDCC EC-1 Modifications	Rev. 0

Record of Revision

Rev.	Reason for Revision
REV. A	FIRST SUBMITTAL OF CALCULATIONS
Rev. 0	All pages of this calculation 3442.053.SCAL.009 Rev. A are considered Rev. 0, approved and released based upon no technical changes to the calculation during/after formal review.

TOTAL PAGES 34

N:\LANL\11970053\90per\Docs\Calcs\CALCCVRHNR09.doc

Holmes & Narver | Raytheon

CALCULATION CHECKLIST

Project #: 100256
Task Order # 053
CCN CHILLED WATER SYSTEM OPTIMIZATION MASTER PLAN

Calculation Number: 3442.053.SCAL.009 Page 2 | Revision A

Reviewer/Checker : JEFREY FREELAND
Reviewer performed or supervised subject calculation.
X NO _____YES Justification Attachment _____, _____ pages
Alternate Verification method approved _____ Method _____

Date 7-11-02

ITEM(S) CHECKED	Accept Y/N	OBJECTIVE EVIDENCE Sheets		INITIAL/ DATE
1. Cover forms properly completed.	Y	NONE		7-11-02
2. Calculation Sheet headers complete with calc. no., rev., etc.	Y	NONE		7-11-02
3. Calculation Sheet contents complete per format.	Y	NONE		7-11-02
4. Listed attachments included.	Y	NONE		7-11-02
5. Calculation Objective clearly described.	Y	NONE		7-11-02
6. Criteria are suitable and properly referenced to task-specific documents.	Y	NONE		7-11-02
7. Assumptions and data described and attached or referenced to task documents.	Y	NONE		7-11-02
8. Calculation method identified and appropriate for the design activity.	Y	NONE		7-11-02
9. Calculation results reasonable and correctly described in Results and Conclusions.	Y	NONE		7-11-02
10. Computer Program identified with version and revision.	Y			
11. Computer Program references method used, etc.	N/A			
12. Computer input/output provided.	N/A			
13. Computer run traceable to calculation.	N/A			
14. Computer input data within permissible design input range.	N/A			
15. Computer Program validation/verification addressed.	N/A			

REMARKS

Checker Print Name & Sign
JEFFERY FREELAND

Date 7-11-02

Preparer Print Name & Sign
DAVID APPLE

Date 7-6-02

Holmes & Narver | Raytheon **STRUCTURAL DESIGN CALCULATION SHEET**	Project Title: CCN CHILLED WATER SYSTEM OPTIMIZATION MASTER PLAN Project ID #100256 Task Order #053 Page 3

Calculation No. 3442.053.SCAL.009	PERFORMED BY : David A Apple 07/06/02 DAVID APPLE
Rev. No. A	CHECKED BY: Jeffrey Freeland 7/11/02 JEFFREY FREELAND
Calculation Title: LDCC 2ND FLOOR EQUIPMENT SUPPORT	

INTRODUCTION Purpose	Perform an analysis to determine if the second level framing system has adequate capacity to carry the additional loads imposed by this project. An air separator and an expansion tank will be the additional loads considered.
Scope	Determine if the second level framing system can support the additional loads imposed by the air separator and expansion tank.
DESIGN BASIS Design Inputs	The LDCC facility is considered a Performance Category (PC) 1 facility. Equipment and component weights provided by Mechanical Engineer and from manufacturers printed information. Second floor loading hung from below was observed and verified as part of the site visit (07/02/02).
Criteria	LANL Facility Engineering Manual, Chapter 5 (Ref. 1).
Assumptions	It is conservative to assume non-composite action between the reinforced concrete floor slab and steel framing members. The concrete deck continuously braces the compression flanges of the steel beams. The equipment frame will match the span of the floor framing system, transferring the load directly to the floor beams.
REFERENCES	(1) LANL Facility Engineering Manual, Chapter 5 (2) ASCE 7-98 (3) AISC Manual of Steel Construction, 9th Edition (4) UBC 1997 (5) 3442.053.SCAL.001 (6) LDCC Building Plans, Lab Job 7050-3
METHODS	Hand calculations were used to prepare these calculations.
RESULTS AND CONCLUSIONS	The second floor framing system has adequate capacity to carry the equipment loads imposed by the present project.

INDEX

2nd Level Framing Plan and Sketch 5

Equipment Data Summary 8

Seismic Loads 9

Equipment Leg Geometry and Loads 11

Equipment Frame Design 14

Air Separator Leg Design 20

Details 22

Qualify Existing Floor Framing Members 25

Appendix – Expansion Tank Data Sheets 29

Appendix – Air Separator Data Sheets 31

Appendix – Existing Floor Slab Thickness - Drawing Sheet S8 Detail 4 . . . 34

#100236 CCN Chilled Water System Optimization Master Plan

LDCC 2nd Floor Eqpt. Support

3442.053 Rev. A

SCAL 005

PROJECT LOCATION

PLAN NOTES

1. TOP OF STEEL @ ELEVATION 117.50 UNLESS NOTED OTHERWISE. +1 ABOVE OR -1 BELOW.
2. DASHED LINE INDICATES BOTTOM CHORD BRACING MEMBER SEE DETAIL 4/S-8. ALL BT TYPE TRUSSES REQUIRE BOTTOM CHORD BRACING AT EACH PANEL PT. EQUAL TO 12/S-8 OR 4/S-8 WITH THE EXCEPTION OF BT-4 IN GRID LINE 6 E-F WHICH WILL BE BRACED AGAINST PRE-CAST PANEL.
3. ALL W24X55 BEAMS SHALL HAVE 45K END REACTIONS UNLESS OTHERWISE NOTED.

THESE RECORD DRAWINGS HAVE BEEN PREPARED FROM INFORMATION SUPPLIED BY THE CONTRACTOR AND SHALL NOT BE CONSTRUED AS A CERTIFICATION OF ACTUAL CONDITIONS BY THE ARCHITECT.

FMBSM

BERNARD JOHNSON, INCORPORATED

LABORATORY DATA COMMUNICATIONS CENTER

2nd LEVEL FRAMING PLAN

Department of Energy

7858-3

ENG-C-45225

ANSI A

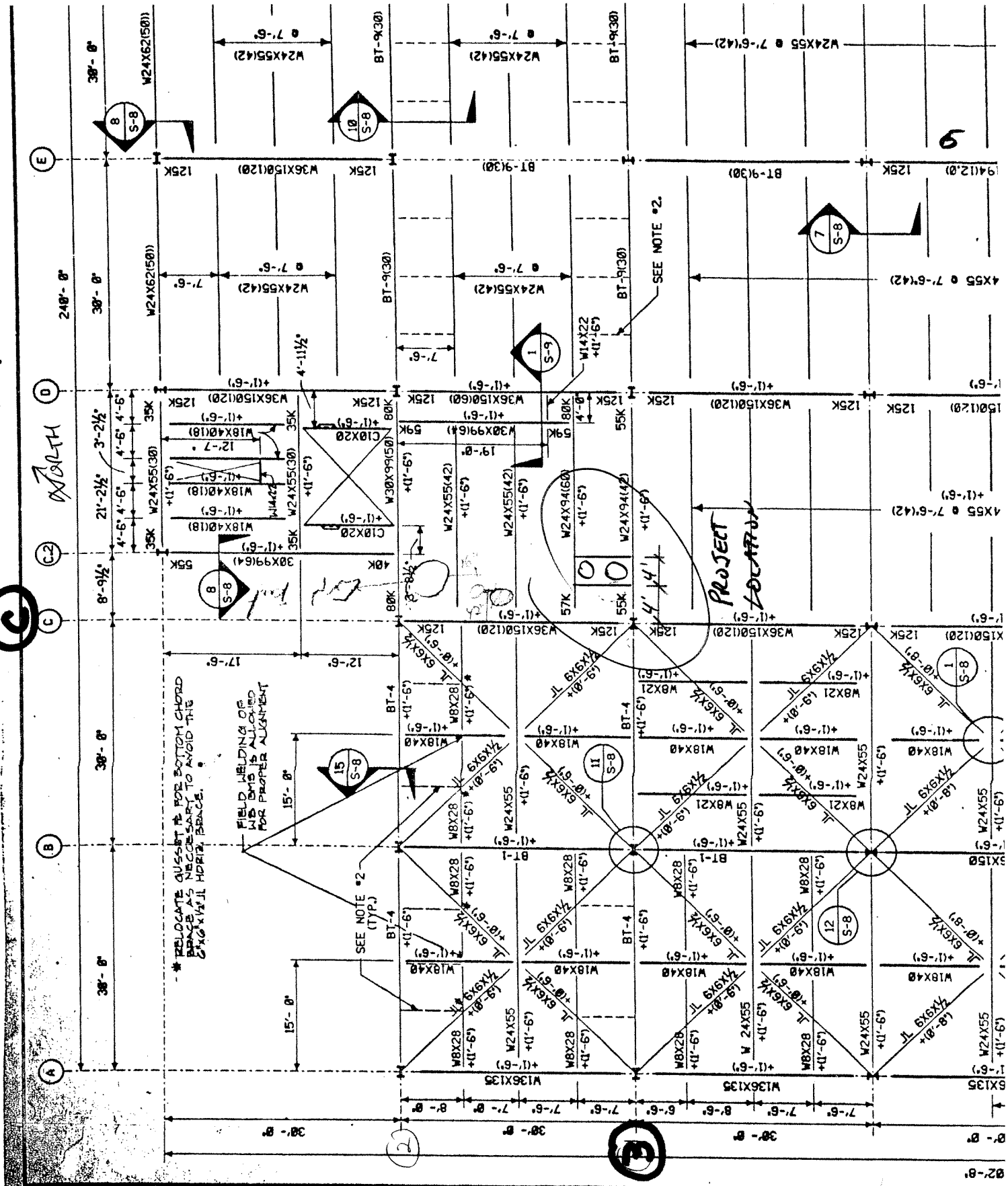

ENLARGED: SHEET S4

3442.053.SCAL.009
Rev A

LDCC 2ND Floor Equipment Support
#100256 CCN Chilled Water System
Optimization Master Plan

DAA 7-6-02
VA 7-11-02

CHECKED J.A DATE 7/11/02

APPROVED _____ DATE _____

DMJMH+N
ARCHITECTS–ENGINEERS
6501 Americas Parkway NE Suite 700
Albuquerque, NM 87110

JOB NO. 3442.053.SCAL.009 Rev. A

SHEET 7 OF _____

TITLE #100256 CCN Chilled Water System Optimization

BY PAA DATE 7-4-02

LDCC 2nd Floor Equipment Support — Master Plan

Ref: 2nd Level Framing Plan LDCC PLANS (see References) p.3

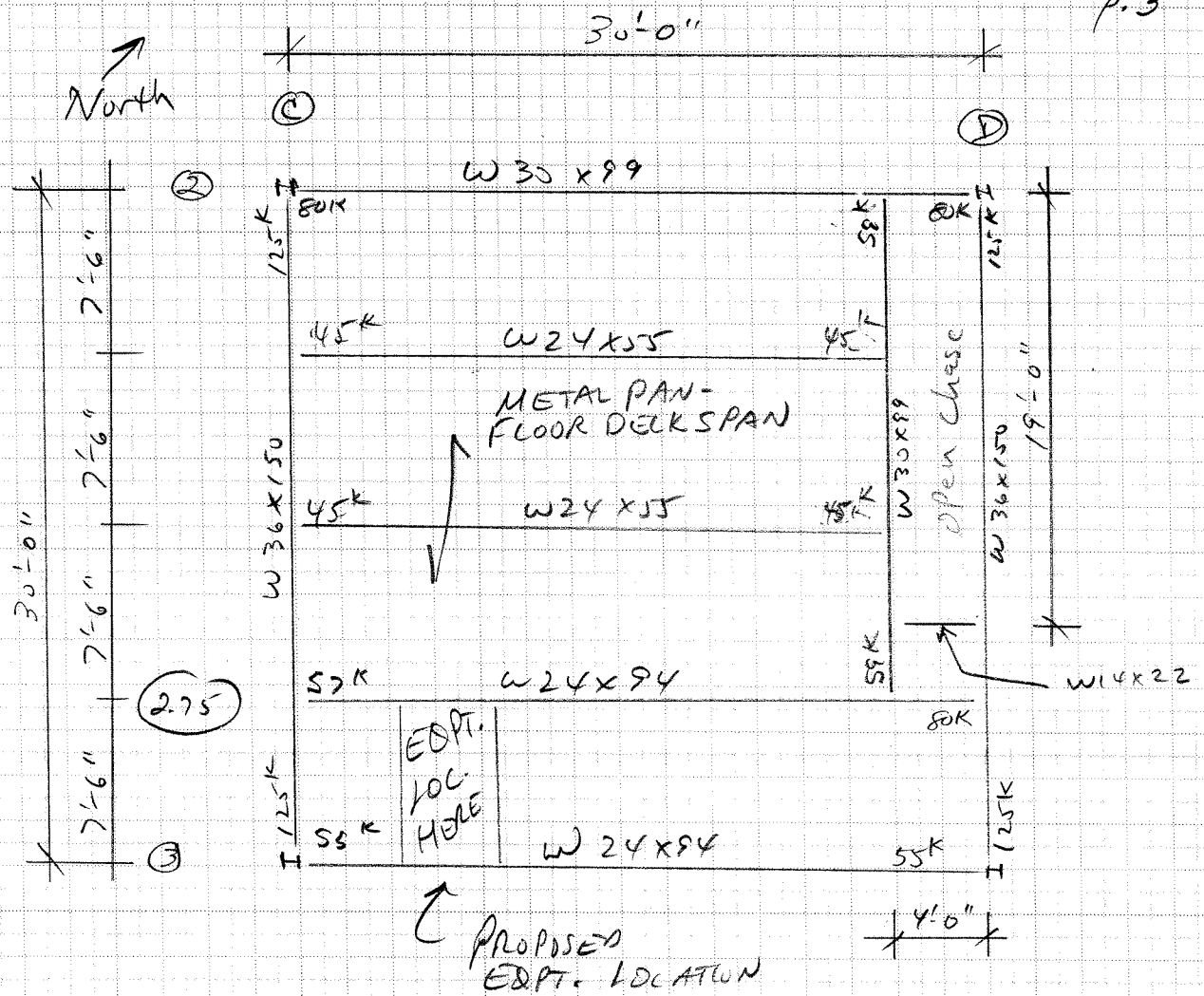

Room Below - Electrical Room

Assume Hanger System - unistrut is designed for 12 psf. (Ref A4.5 Plans) see Ref. p.3

Visual inspection by D-Apple 7-2-02 verifies unistrut in ceiling - very little conduit hung from strut system. ⇒ 12psf OK to assume.

S2 250 psf floor (elevated) loads

S6 2nd level Slab plan - 6" conc. #6 @12 OC T.B ⊥ ribs

S-16 A36 Floor deck 1½" 20ga. SPAN 7'-6" #5 @12 ⊥ ribs Top of slab.

CHECKED VA DATE 7-11-02

APPROVED _____ DATE _____

DMJMH+N
ARCHITECTS–ENGINEERS
6501 Americas Parkway NE Suite 700
Albuquerque, NM 87110

JOB NO. 3442.053.SCAL.009 Rev-A

SHEET 8 OF _____

TITLE CDCC 2nd Floor Equipment Support

BY DAA DATE 7-6-02

#100256 CCN Chilled Water System Optimization Master Plan

Equipment Data

1) Expansion Tank: 1868 lbs

Amtrol "L" Series Model 600-L (See p. 29)

height: 65 inch
diameter: 30 inch
operating weight 1868 lbs.

} Data sheet provided 6-25-02 by David Walker B&P.

Allow 18" min clear for piping

NOTE: Per David Walker: ① ok on floor slab or on platform.
② ok to locate on CDCC Mezzanine between C2-C3 - DL-D3 (column lines) nearest to col. C.

Per Doug Hefele (CAM): ok to locate over electric room on ground floor - minimal conduit supported from ceiling.

Per David Walker: eqpt can be welded to its support ring. Ring will have "clips" that can be welded to a steel plate mounted to platform.

2) Rolairtrol Air Separator 3367 lbs

Rolairtrol Model RL 12 GB (See p. 33)

ht (A) 75 3/8"
dia (E) 36"
wt. 3367 lbs (Per DFW) flood wt. ?
NPT on bracket 2" Ø dia @ 46 3/4" Ø circle (F)

SAY 40" Ø for legs - conservative, ok.

Length of support legs = (L) + 1' min L + 1.5 ft max
(L) = 37 5/8" ⇒ Legs = 4'-6".

CHECKED ✓ DATE 7-11-02 | DMJMHN ARCHITECTS–ENGINEERS 6501 Americas Parkway NE Suite 700 Albuquerque, NM 87110 | JOB NO. 3442.053.SCAL.009 Rev. A

APPROVED _____ DATE _____ | SHEET 9 OF _____

TITLE LDCC 2nd Floor Equipment Support | BY DAA DATE 7-6-02

#100256 CCN Chilled Water System Optimization Master Plan Ref: LANL LEM Ch. 5

Seismic Loads PC1 Facility

1) Expansion tank

SAY: WT = 1900 lbs ✓

Clips @ 36" spacing (3'-0"). around 30" Ø unit diameter.

$F_p = a_p C_a I_p W_p [1 + 3(h_x/h_r)] / R_p$

$C_a = 0.28$, $I_p = 1.0$ } Table 202.1B

$W_p = 1900$ lbs above

$a_p = 1.0$, $R_p = 3.0$ } Table 202.3 Eqpt., tanks

$h_x = 12.5$ ft, $h_r = 53$ ft } Bldg plans (3442.053 Scal.001 Sheet 4) SEE REF. P.3

$a_p[1 + 3(h_x/h_r)]/R_p = (1.0)[1 + 3(12.5/53)]/3 = 0.66$

but $0.7 \le a_p[1 + 3(h_x/h_r)]/R_p \le 4 \Rightarrow$

USE $a_p[1 + 3(h_x/h_r)]/R_p = 0.7$

$F_p = (0.7)(0.28)(1.0)(1900 \text{ lbs})$

$F_p = 372$ lbs ← USE ✓

alternately $F_p = 4.0\, C_a I_p W_p = (4)(0.28)(1.0)(1900 \text{ lbs})$

NOT USED → $F_{p\,alt.} = 2128$ lbs.

2) Air Separator

SAY WT = 3400 lbs ✓

Support legs @ 3.33 ft Ø circle ~ 3 legs.

$F_p = 0.7(0.28)(1.0)(3400 \text{ lbs})$

$F_p = 667$ lbs ← USE ✓

NOT USED → $F_{p\,alt.} = (4)(0.28)(1)(3400 \text{ lbs})$

$F_{p\,alt} = 3808$ lbs.

CHECKED VA DATE 7-11-02

APPROVED _____ DATE _____

DMJMH+N
ARCHITECTS–ENGINEERS
6501 Americas Parkway NE Suite 700
Albuquerque, NM 87110

JOB NO. 3442.053-SCAL-009 Rev. A

SHEET 10 OF _____

TITLE LDCC 2nd Floor Equipment Support

BY DAA DATE 7-6-02

#100256 CCN Chilled Water System Optimization Master Plan

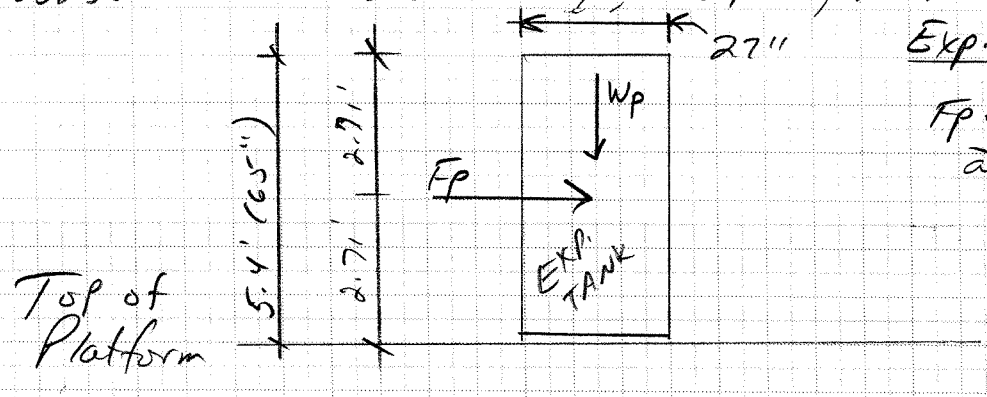

Exp. Tank

Fp = 372 lbs (p.9)
@ 2.71 FT

M_{OT} = 372 lbs (2.71 ft) = 1008 lb-ft (12 in/ft) = 12100 in-lb

T = C = (12100 lb-in)/(27 inch) ← p.11

T = C = 448 lbs ↑ or ↓

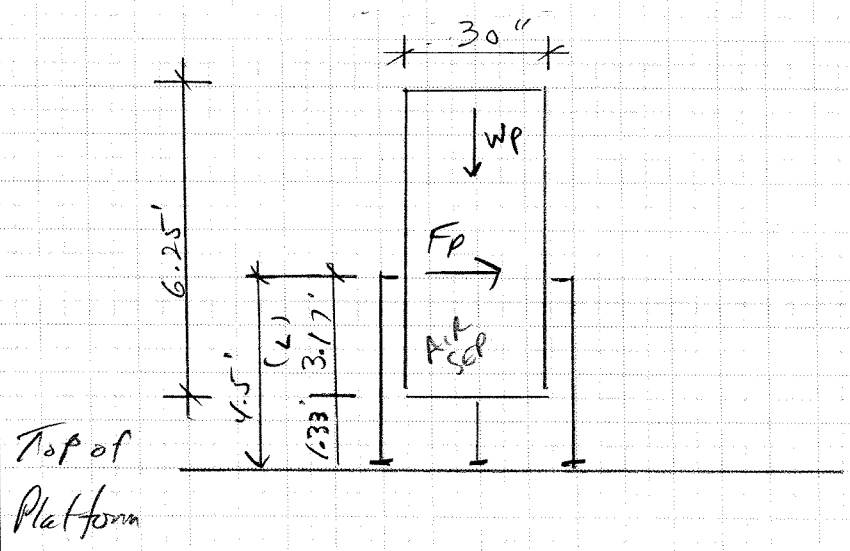

Air Separator

Fp = 667 lbs (p.9)
@ 4.5 FT

M_{OT} = 667 lbs (4.5 ft)(12 in/ft) = 36018 inch-lbs

T = C = (36018 in-lbs)/(30 inch) ← p.11

T = C = ~~1203~~ lbs ↑ or ↓

DAA 1200.6 lbs

CHECKED ✓ DATE 7-11-02

APPROVED _____ DATE _____

DMJMH+N
ARCHITECTS–ENGINEERS
6501 Americas Parkway NE Suite 700
Albuquerque, NM 87110

JOB NO. 3442.053.SCAL..009 Rev. A

SHEET 11 OF _____

TITLE LDCC 2nd Floor Equipment Support

BY JAA DATE 7-6-02

#100256 CCN Chilled Water System Optimization Master Plan

LEG Geometry

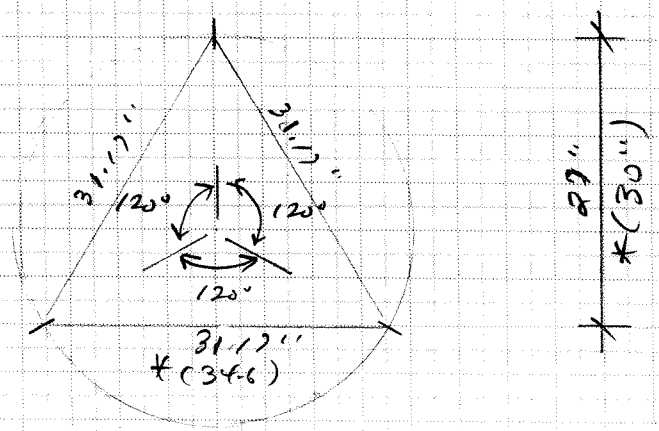

FOR:

Dia = 36" (Exp. Tank c/l ℄ clips) (Dim's from ACAD)

* DIA = 40" (Air Separator 2"ϕ legs ℄ ϕ) Dims in ( )

FOR: EXP. TANK

CLIP ANGLE FOR MOUNTING

Ptank per leg = 1900 lbs/3 = 633 lbs ↓ (DL)

Fseis = 448 lbs ↓ (p. 10)

Pmax/Leg = 1081 lbs, SAY Pmax = 1080 lbs (EXP. TANK)

← CLIP ANGLE FOR MOUNTING ← Seis. + Tank DL.

Air Separator

Ptank per leg = 3400 lbs/3 = 1133 lbs. (DL)

Fseis = 1203 lbs (p. 10)

Pmax/LEG = 2336 lbs. (Air Separator)

← Seis. + Tank DL

LOCC 2nd Floor Equipment Support
#100256 CCN Chilled Water System
Optimize Air Master Plan

Orig.: Draft 7-6-02
Rev. 7-11-02

3442.053.SCAL.009
Rev. A

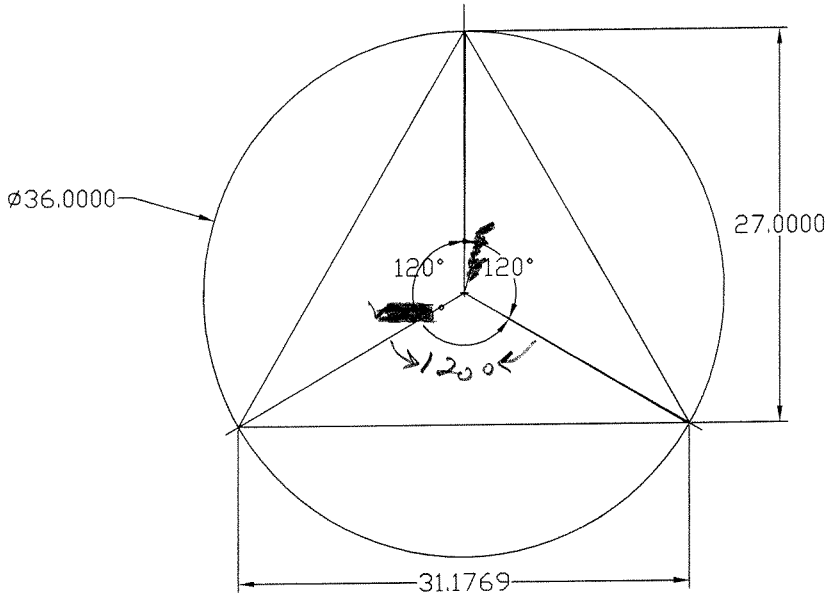

Expansion Tank

30" Tank dia.
Assume 36" ø bolt circle
for manuf. installed
Clips.

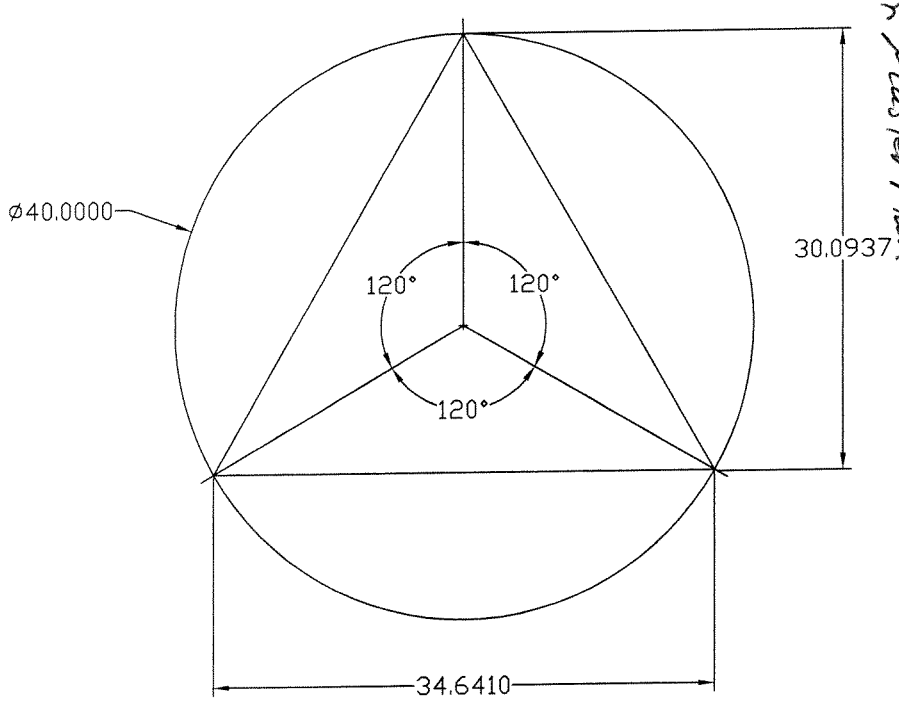

Air Separator

36" Tank dia.
Assume 2" to ℄ of clips
for 2" NPT Legs ⇒
40" ø bolt circle for leg ℄.

CHECKED ✓ DATE 7-11-02

APPROVED _____ DATE _____

DMJMHN
ARCHITECTS–ENGINEERS
6501 Americas Parkway NE Suite 700
Albuquerque, NM 87110

JOB NO. 3442.053.SCAL.009 Rev-A

SHEET 13 OF _____

TITLE LDCC 2nd Floor Equipment Support

BY DAA DATE 7-6-02

#100256 CCN Chilled Water System Optimization Master Plan

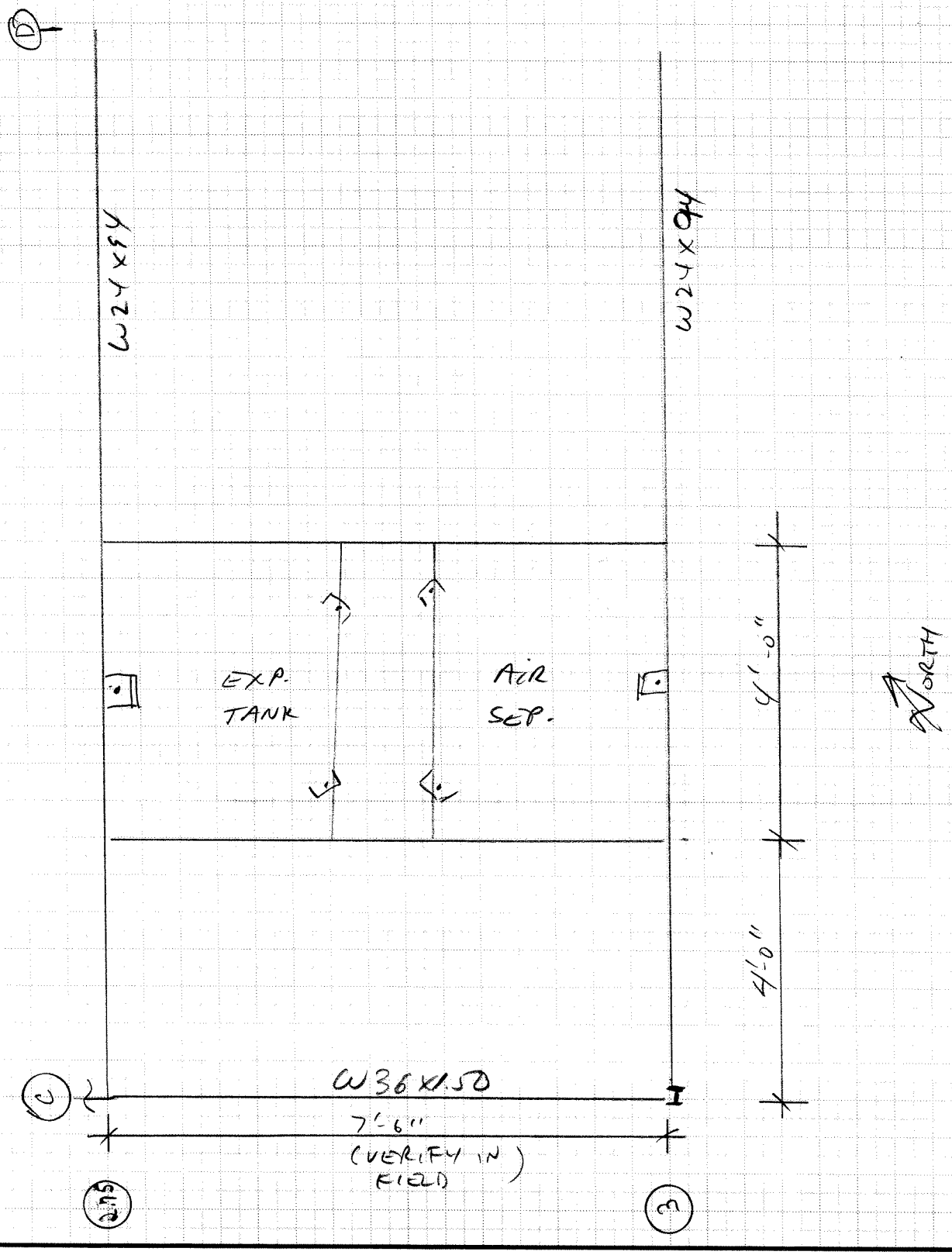

CHECKED ✓/ DATE 7-11-02 | **DMJMHN** ARCHITECTS–ENGINEERS | JOB NO. 3442.053.SCAL.009 Rev. A

APPROVED _____ DATE _____ | 6501 Americas Parkway NE Suite 700 Albuquerque, NM 87110 | SHEET 14 OF _____

TITLE LDCC 2nd Floor Equipment Support | BY RAA DATE 7-6-02

100256 CCN Chilled Water System Optimization Master Plan

Consider one "L" for entire frame. ok

Consider corner braces, SAY 12" at each corner.

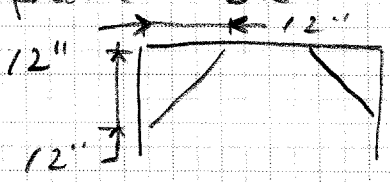

For long direction: Load on 7.5 FT FRAME MEMBER

Span effective = 7.5' − 2(1 FT) = 5.5 ft

(p.11) P_{max} (at ℄) = (2336 lbs + 1081 lbs) = 3417 lbs

SAY $P_{max_{℄}}$ = 3417 lbs. ✓ ← CONSERVATIVE, OK. ✓

For short direction: LOAD ON 4.0 FT FRAME MEMBER @ perimeter w/bracing

Span effective = 4' − 2(1') = 2 ft.

(p.11) P_{max} @℄ perimeter 4' member = 2336 lbs (Air separator controls). LOAD FROM EXP. TANK IS LESS, ONE DESIGN USED ⇒ CONSERVATIVE, OK.

For short direction: Load on 4.0 FT INTERIOR FRAME MEMBER W/O BRACING

Span = 4.0 FT

Assume P_{max} @℄ = 1133 lbs/leg (p.11) × 2 legs + 1203 lbs Seis. (p.10)

P_{max} @℄ interior 4' = 3469 lbs

Air separator controls – USE SAME DESIGN FOR BOTH INTERIOR MEMBERS. OK ✓

CHECKED JA DATE 7-11-02

APPROVED _____ DATE _____

DMJMH+N
ARCHITECTS–ENGINEERS
6501 Americas Parkway NE Suite 700
Albuquerque, NM 87110

JOB NO. 3442.053.SCAL-009 Rev A

SHEET 15 OF _____

TITLE LDCC 2nd Floor Equipment Support

BY DAA DATE 7-6-02

100256 CCN Chilled Water System Optimization Master Plan

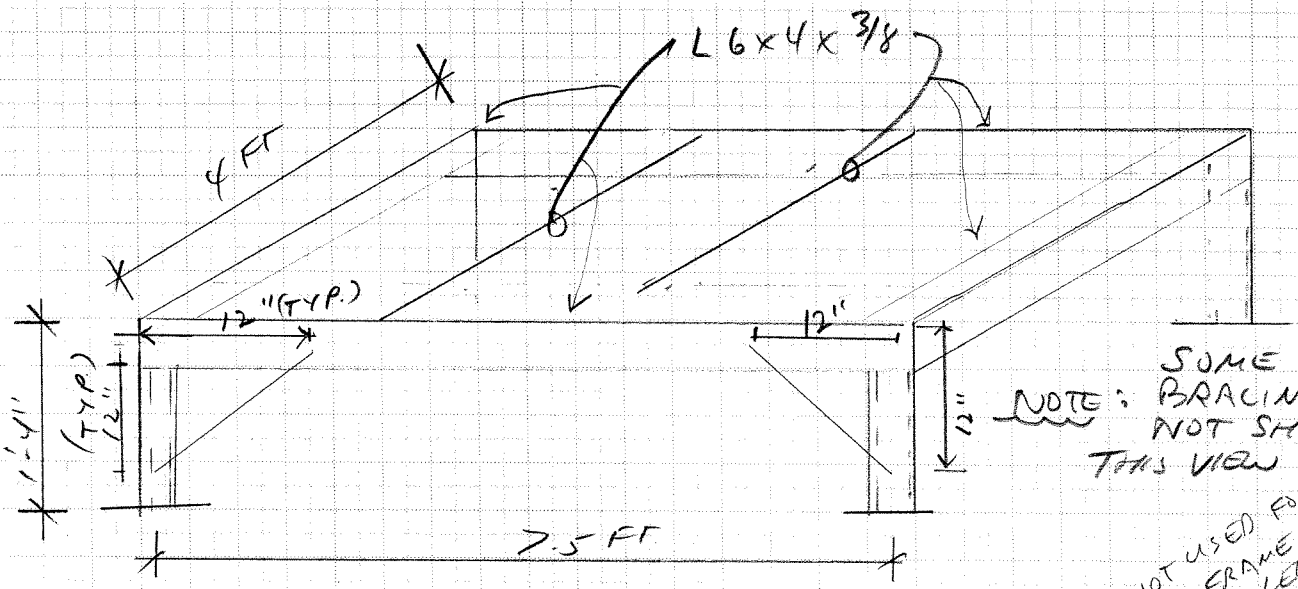

NOTE: SOME BRACING NOT SHOWN THIS VIEW

FRAME:

LEGS: L 3x3x1/4
BASE R.: 1/4x10x10
FRAMING: L 6x4x3/8 (ALL MEMBERS)

See attached spreadsheet for analysis (p. 16, 17)

Long Dir. (p.16) { Δ = 0.053 inch ok; fb = 17.2 ksi ok

Short Dir. (p.17) { Δ = 0.021 inch ok; fb = 12.6 ksi ok.

NOT USED FOR FRAME LEGS

ASD 9th p. 1-93

2" Ø Sch. 40

OD	2.375	in.
ID	2.067	in.
tw	0.154	in.
A	1.07	in²
I	0.666	in⁴
S	0.561	in³
r	0.787	
w	3.65	plf

Try: L 6x4x3/8 p. 1-47

w	12.3	plf
A	3.61	in²
S	3.32	in³
rx	1.93	in
Ix	= 13.5	in⁴

Consider: 7'-6" framing member with bracing at 12" from each end.

Span eff. =	5.5	ft. =	66	inch	
P =	3417	lbs =	3.417	kips	(page 13)

Member:	L 6x4x3/8		ASD 9th Ed., page 1-47)	
w self =	12.3	lbs/ft =	0.001025	kips/inch
Sx =	3.32	in^3		
Ix =	13.5	in^4		
Fy =	36	ksi		
E =	29000	ksi		

For a simple span with a concentrated load at the centerline and a uniform load:

Mmax = P*L/4 + w*L^2/8

Mmax = 56.94 kip-inch

fb = Mmax/Sx

fb = 17.15 ksi USE 17.2 KSI

Fb = 0.6*Fy Conservative, OK.

Fb = 21.6 ksi OK, fb<Fb

For a simple span with a concentrated load at the centerline and a uniform load:

Deflection = P*L^3/(48*E*I) + 5*w*L^4/(384*E*I)

Deflection = 0.053 inch

Allow. Defl. = L/360 Conservative, OK.

Allow. Defl. = 0.183 inch OK, Actual Defl. < Allow. Defl.

Deflection = L/ 1247

Checked: Date:
Approved: Date:
Title: LDCC 2nd Floor Equipment Support

DMJMH+N

Job No. 3442.053.SCAL.009
Rev. A .
Sheet 17 .
By DAA Date: 07/06/02

#100256 CCN Chilled Water System Optimization Master Plan

DAA
VA 7-11-02

Consider: 4'-0" framing member with bracing at 12" from each end.

Span eff. =	2	ft. =	24	inch	
P =	2336	lbs =	2.336	kips	(page 13)

Member:	L 6x4x3/8		ASD 9th Ed., page 1-47)	
w self =	12.3	lbs/ft =	0.001025	kips/inch
Sx =	3.32	in^3		
Ix =	13.5	in^4		
Fy =	36	ksi		
E =	29000	ksi		

For a simple span with a concentrated load at the centerline and a uniform load:
Mmax = P*L/4 + w*L^2/8
Mmax = 14.09 kip-inch

fb = Mmax/Sx
fb = 4.24 ksi
Fb = 0.6*Fy Conservative, OK.
Fb = 21.6 ksi OK, fb<Fb

For a simple span with a concentrated load at the centerline and a uniform load:
Deflection = P*L^3/(48*E*I) + 5*w*L^4/(384*E*I)
Deflection = 0.002 inch
Allow. Defl. = L/360 Conservative, OK.
Allow. Defl. = 0.067 inch OK, Actual Defl. < Allow. Defl.
Deflection = L/ 13875

Consider: 4'-0" framing member without bracing - interior members.

Span eff. =	4	ft. =	48	inch	
P =	3469	lbs =	3.469	kips	(page 13)

Member:	L 6x4x3/8		ASD 9th Ed., page 1-47)	
w self =	12.3	lbs/ft =	0.001025	kips/inch
Sx =	3.32	in^3		
Ix =	13.5	in^4		
Fy =	36	ksi		
E =	29000	ksi		

For a simple span with a concentrated load at the centerline and a uniform load:
Mmax = P*L/4 + w*L^2/8
Mmax = 41.92 kip-inch

fb = Mmax/Sx USE 12.6 KSI
fb = 12.63 ksi
Fb = 0.6*Fy Conservative, OK.
Fb = 21.6 ksi OK, fb<Fb

For a simple span with a concentrated load at the centerline and a uniform load:
Deflection = P*L^3/(48*E*I) + 5*w*L^4/(384*E*I)
Deflection = 0.021 inch
Allow. Defl. = L/360 Conservative, OK.
Allow. Defl. = 0.133 inch OK, Actual Defl. < Allow. Defl.
Deflection = L/ 2331

CHECKED VA DATE 7-11-02

APPROVED _____ DATE _____

DMJMH+N
ARCHITECTS–ENGINEERS
6501 Americas Parkway NE Suite 700
Albuquerque, NM 87110

JOB NO. 3442.053-SCAL-009 Rev-A

SHEET 18 OF _____

TITLE LDCC 2nd Floor Equipment Support

BY DAA DATE 7-6-02

#100256 CCN Chilled Water System Optimization Master Plan

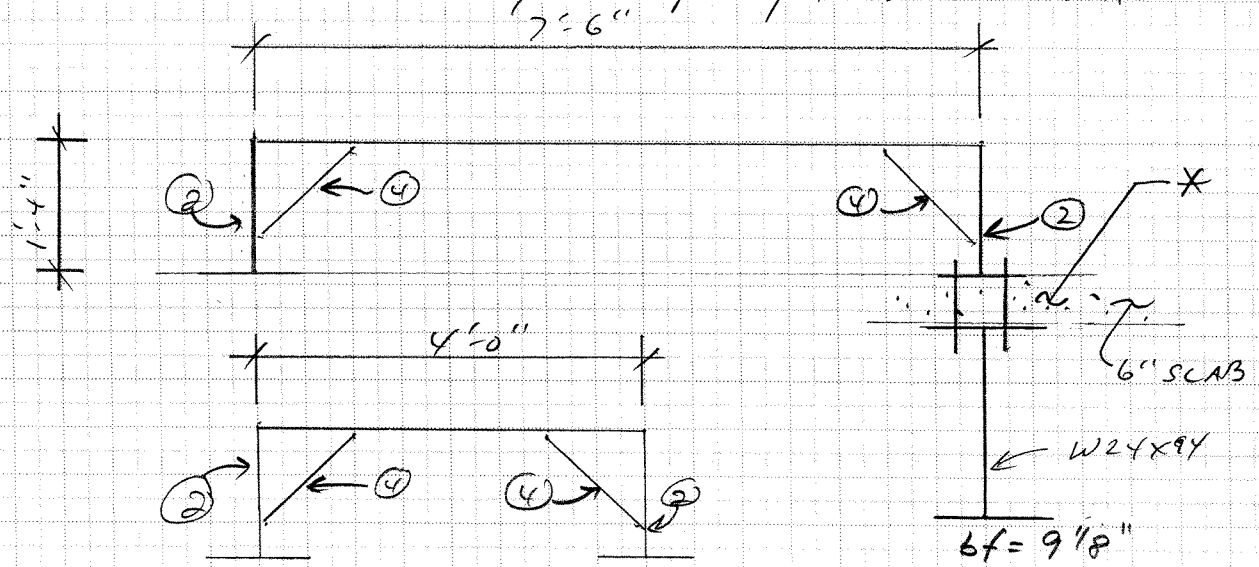

* PROVIDE PIPE SPACERS, AS REQ'D. AROUND BOLTS TO FILL VOID BETWEEN PAN DECK AND TOP FLANGE W24X94

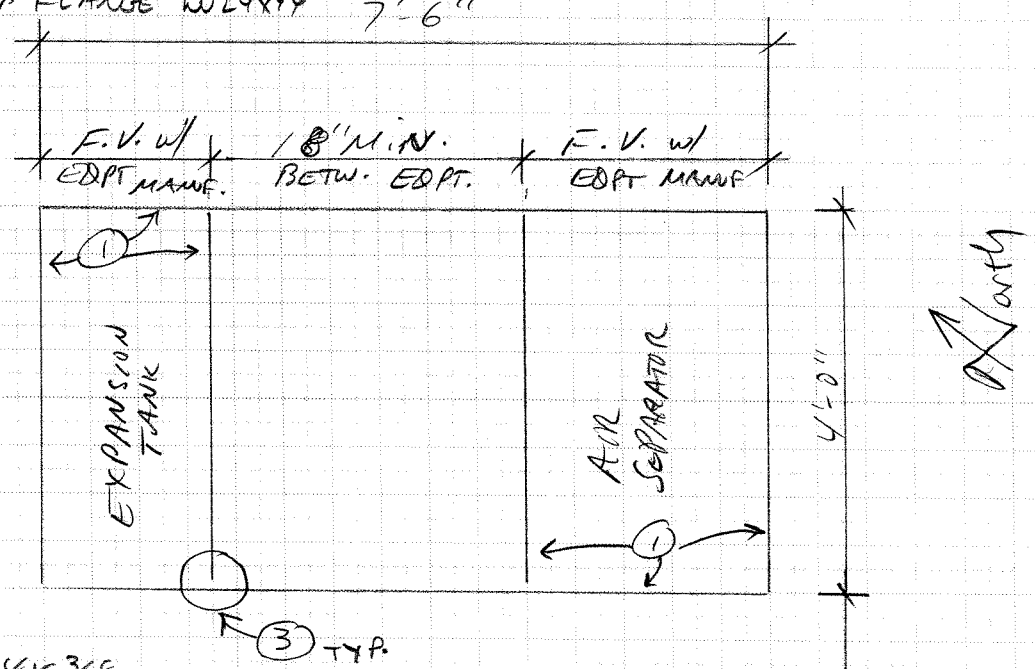

1. L6X4X3/8
2. L 3X3X1/4 - 3/16" FILLET WELDS
3. COPE TOP FLANGE OF SHORT MEMBER
4. L3X2X1/4 3/16" FILLET
5. 3/4" Ø A307 BOLTS, NUTS, WASHERS.

CHECKED VA DATE 7-11-02

APPROVED _____ DATE _____

DMJMH+N
ARCHITECTS–ENGINEERS
6501 Americas Parkway NE Suite 700
Albuquerque, NM 87110

JOB NO. 3442.053.SCAL.009 Rev. A

SHEET 19 OF _____

TITLE LDCC 2nd Floor Equipment Support

BY AAA DATE 7-6-02

#100256 CCN Chilled Water System Optimization Master Plan

LEGS FOR EQPT FRAME

USE: L 3x3x1/4 $A = 1.44 in^2$

$P_{max} = 2080 lbs$ (p. 26)

Length = 16"

$P_{max} = 2.1^K$

$P/A = f_a = 1.46^{ksi} << F_a$ by inspection.

OK.

Base Plate for Eqpt Frame:

USE: 1/4 x 10 x 10

Top flange W24x94; bf = 9.065" OK.

USE 4 ~ 3/4" ϕ A307 Bolts per plate.

(L ≅ 12") OK by inspection.

BRACING FOR EQPT FRAME

USE: L 3x2x1/4 for constructability ease.

2" Leg will not extend outside of L 3x3x1/4 vertical legs.

OK.

Welds

L 3x3x1/4 to 1/4" Plate

ASD 9th J2 p. 5-67 { min 1/8" ← OK TO USE
max 1/4 - 1/16 = 3/16" ↙

∴ USE 3/16" FILLET ALL WELDS.

L 3x3x1/4 to L 6x4x3/8

min 3/16"

max 3/16" ← OK TO USE.

CHECKED VA DATE 7-11-02

APPROVED _____ DATE _____

DMJMH+N
ARCHITECTS–ENGINEERS
6501 Americas Parkway NE Suite 700
Albuquerque, NM 87110

JOB NO. 3442053.SCAL.009 Rev. A

SHEET 20 OF _____

TITLE LDCC 2nd Floor Equipment Support

BY DAA DATE 7-6-02

#100256 CCN Chilled Water System Optimization Master Plan
Rolairtrol Air Separator - Legs

Per manuf. data: 2" NPT : dim N on cut sht.

Qualify 2" Ø SCH 40 PIPE.

$L = 37\frac{5}{8}''$, SAY $L = 38''$ OK.

$P_{max\,Leg} = 2336$ lbs (page 11 calcs)

2" Ø Sch 40 ASD 9th p. 1-93

OD = 2.375 in.
ID = 2.067 in
$t_{wall} = 0.154$ in
$A = 1.07\ in^2$
$I = 0.666\ in^4$
$S = 0.561\ in^3$
$r = 0.787$

A53 Type E Gr. B
$F_y = 35$ ksi
$F_u = 60$ ksi

EITHER IS OK TO USE.

Type S Gr. B
$F_y = 35$ ksi
$F_u = 60$ ksi.

Ck Slenderness: Tbl. B5-1
Circular sections $D/t = \frac{2.375}{0.154} = 15.4$

Limit of D/t: $3300/F_y = 3300/35 = 94.28$
OK. Compact.

$C_c = 127.9$ Tbl. 4 p. 5-120 ASD 9th

$k = 1.0$ Assume Pin-Pin p. 5-135 ASD 9th

$kl/r = (1.0)(38\ in)/0.787\ in = 48.28$

EQ. (E2.1)

$$F_a = \frac{\left[1 - \frac{(kl/r)^2}{2C_c^2}\right] F_y}{5/3 + \frac{3(kl/r)}{8C_c} - \frac{(kl/r)^3}{8C_c^3}}$$

CHECKED VA DATE 7-11-02

APPROVED _____ DATE _____

DMJMH+N
ARCHITECTS–ENGINEERS
6501 Americas Parkway NE Suite 700
Albuquerque, NM 87110

JOB NO. 3442.053.SCAL.009 Rev-A

SHEET 21 OF _____

TITLE LDCC 2nd Floor Equipment Support

BY DAA DATE 7-6-02

Rolairtrol (Cont.)

#100256 CCN Chilled Water System Optimization Master Plan

$$F_a = \frac{\left[1 - \frac{(48.28)^2}{2(127.9)^2}\right](35^{ksi})}{5/3 + \frac{3(48.28)}{8(127.9)} - \frac{(48.28)^3}{8(127.9)^3}} = \frac{32.5\,ksi}{1.801} = 18.04\,ksi$$

$$f_a = P/A = \frac{2.34^{k}}{1.07\,in^2} = 2.19\,ksi$$ ← P.11, calcs

$(f_a = 2.19\,ksi) < (F_a = 18.04\,ksi) \Rightarrow$ OK.

2" Ø SCH 40 LEGS for Rolairtrol OK.

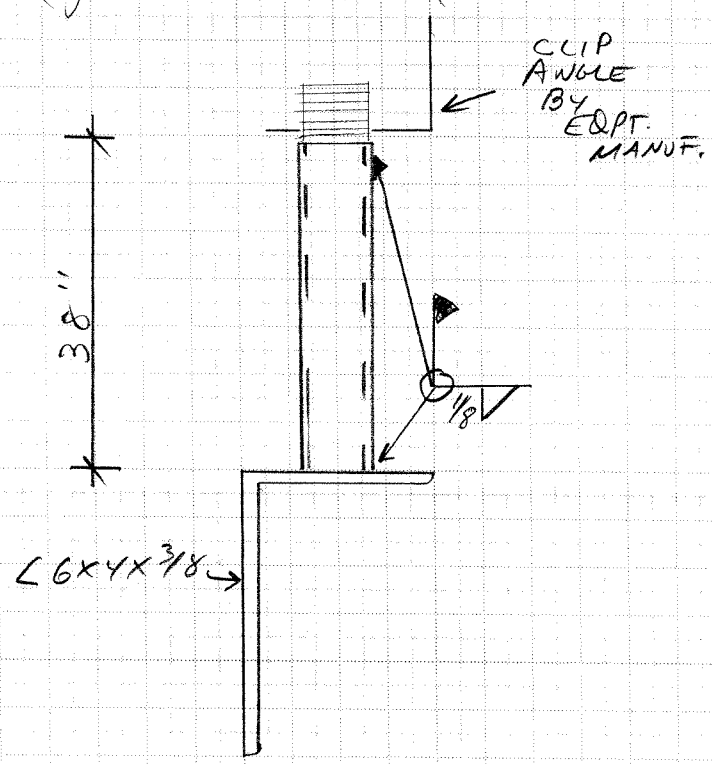

TYPICAL ROLAIRTROL LEG DETAIL

LOCC 2nd Floor Equipment Support
#100256 CCN Chilled Water System
Optimization Master Plan

3442.053.SCAL-009
Rev. A
Orig. RAA 7-6-02
VM 7-11-02

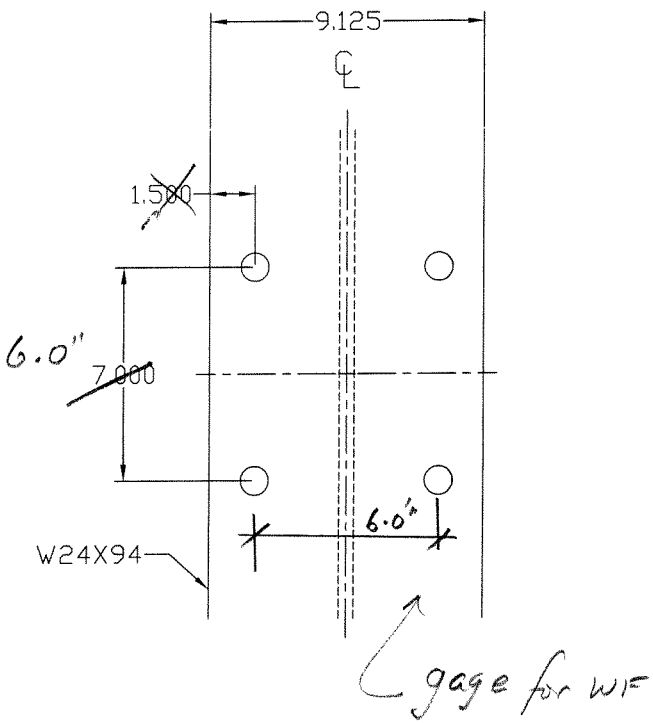

W24 X 94
HOLE LAYOUT

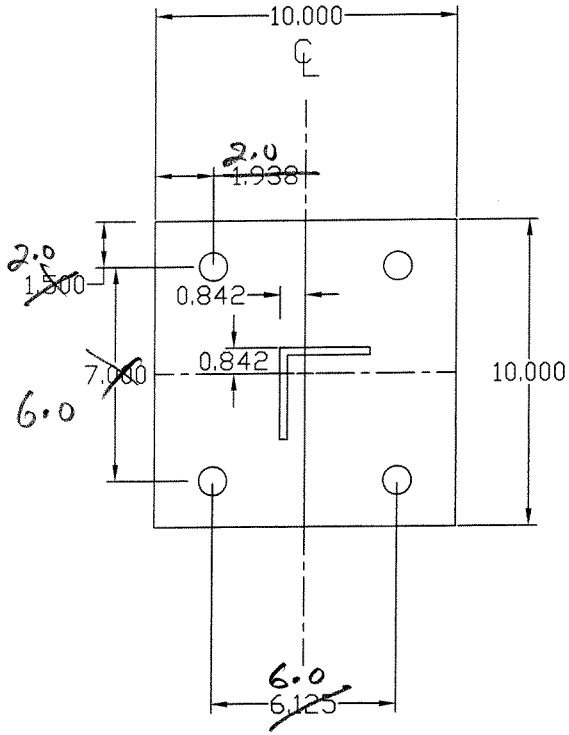

BASE PLATE
DETAIL

NOTE: Dim's adjusted for ease of fabrication

CHECKED ✓ DATE 9-11-02

APPROVED _____ DATE _____

DMJMH+N
ARCHITECTS–ENGINEERS
6501 Americas Parkway NE Suite 700
Albuquerque, NM 87110

JOB NO. 3442.053. SCAL.009 Rev. A

SHEET 23 OF _____

TITLE LDCC 2nd Floor Equipment Support

BY DAA DATE 7-6-02

FRAMING DETAILS

#100256 CLN Chilled Water System Optimization Master Plan

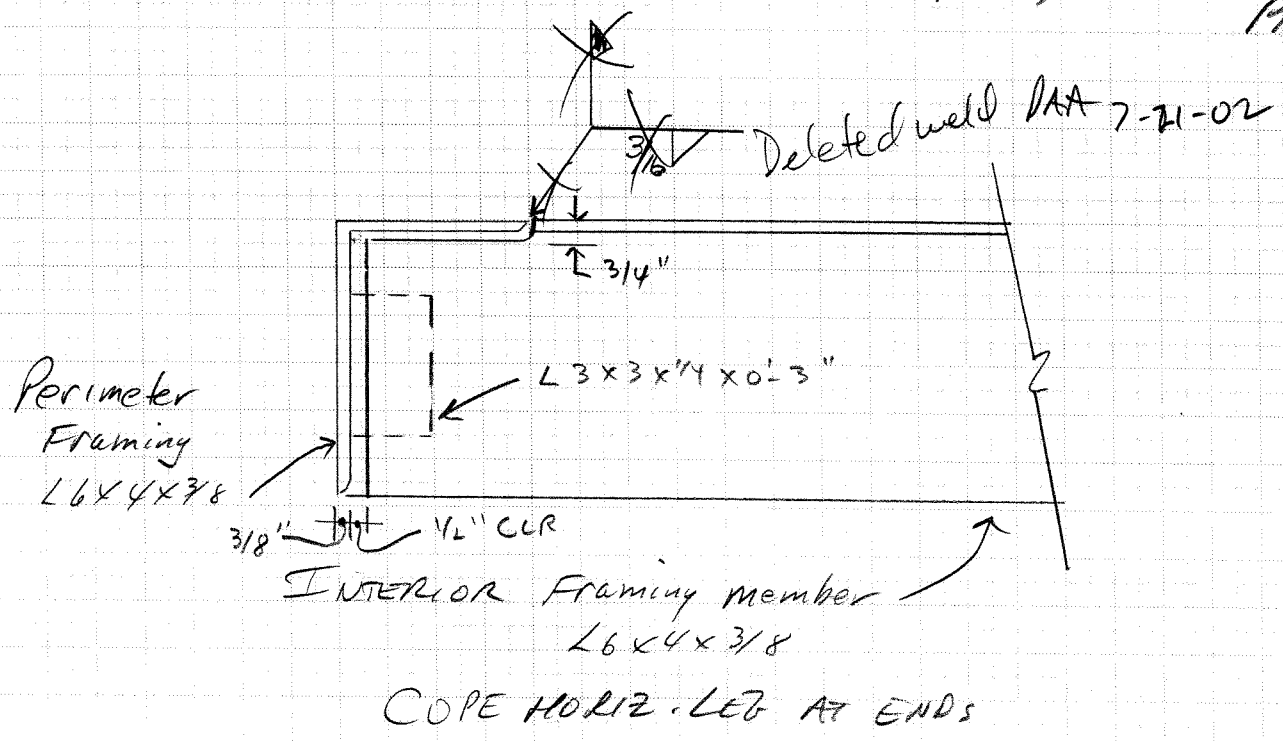

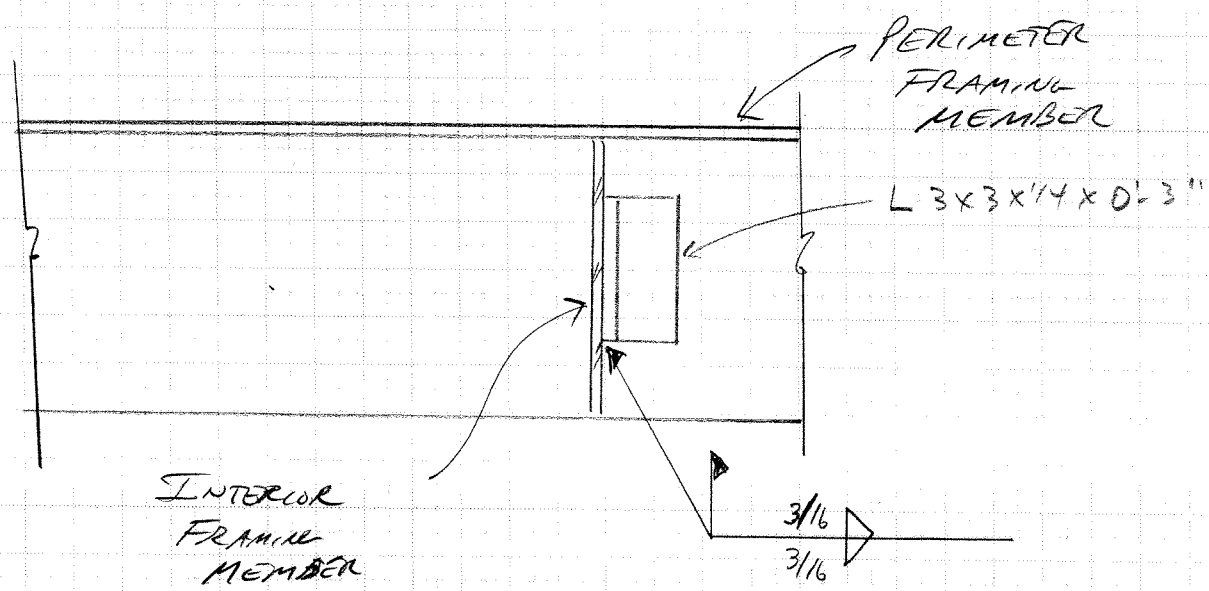

CHECKED VP DATE 7-11-02

APPROVED _____ DATE _____

DMJMH+N
ARCHITECTS–ENGINEERS
6501 Americas Parkway NE Suite 700
Albuquerque, NM 87110

JOB NO. 3442.053-SCAL-009 Rev. A

SHEET 24 OF _____

TITLE LDCC 2nd Floor Equipment Support

BY AA DATE 7-6-02

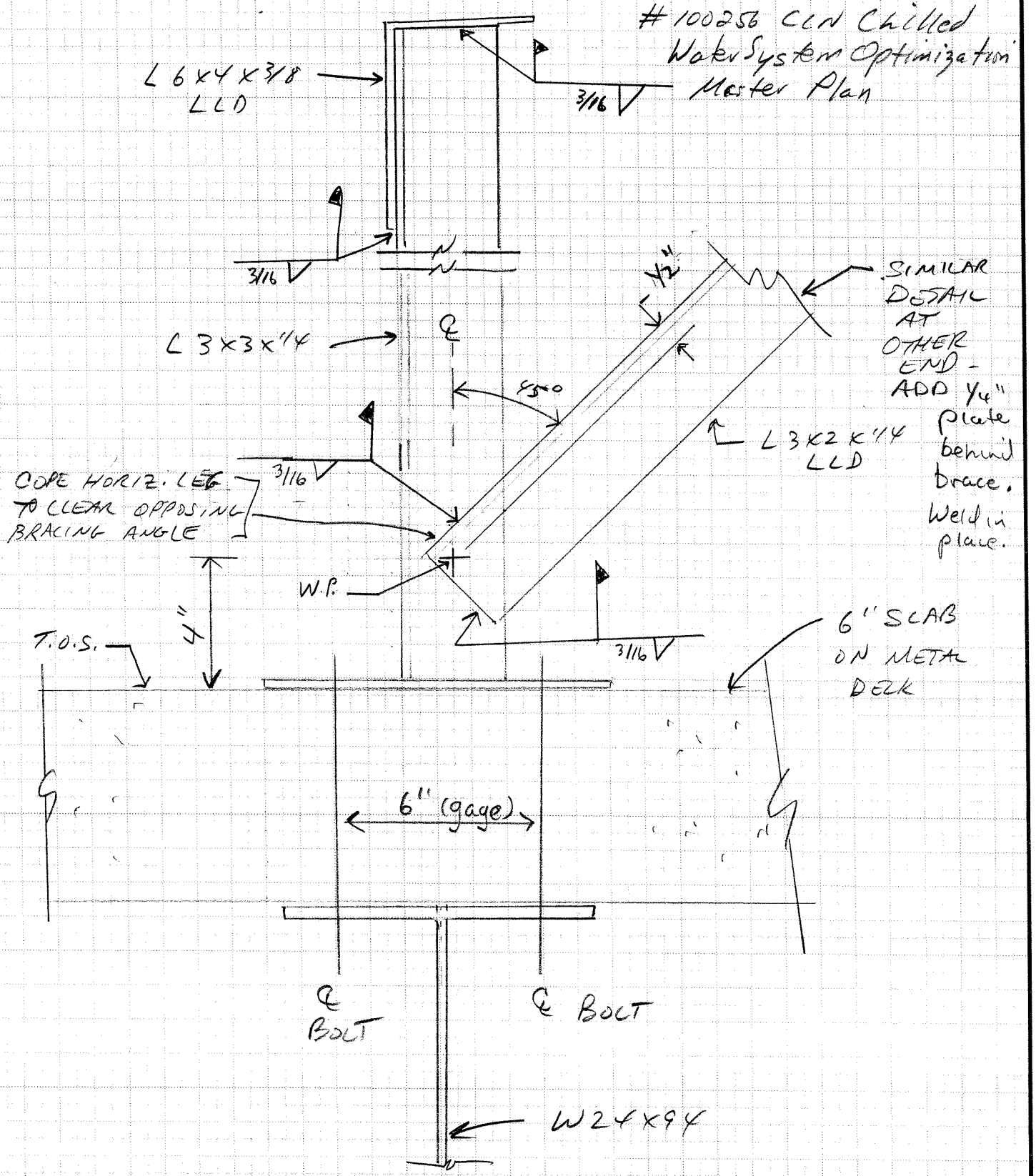

BRACING - TO LONG SIDE OF FRAME

CHECKED ✓ DATE 7-11-02 | **DMJMH+N** ARCHITECTS–ENGINEERS 6501 Americas Parkway NE Suite 700 Albuquerque, NM 87110 | JOB NO. 3442.053-SCAL-009 Rev-A

APPROVED _____ DATE _____ | SHEET 25 OF _____

TITLE LDCL 2nd Floor Equipment Support | BY AA DATE 7-6-02

100256 CLN Chilled Water System Optimization Master Plan

Check floor beams:

W24 x 94 @ C-D (2.75) (3)
C-D

L = 30 ft.

AISC 9th 1-18
A = 27.7 in²
tw = 0.515 in
bf = 9.065 in
tf = 0.875 in
Ix = 2700 in⁴
Sx = 222 in³

Assume:

Floor acts non-compositely OK, conservative

(SEE, p. 32) Floor: concrete t = 6" OK, conservative – on 1½" deck pan

Load from below: 12 psf ← (A 4.5 plan set SCAL-001 App. p 3)

Compression flange fully supported.

Look at increase stress, deflection.

LOADS:

Self wt beam = 94 plf = 0.94 KLF
floor slab: (7.5 ft)(75 psf) = 0.56 KLF
Grid below: (7.5 ft)(12 psf) = 0.09 KLF

1.59 KLF, SAY 1.25 KLF
OK, conservative.

EQPT FRAME: L6x4x3/8 @ 12.3 PLF

4 legs: 4(1.33 ft) = 5.32 (OK, ACTUAL L3x3x1/4 Less wt., Conservative)
2 long: 2(7.5 ft) = 15.0
2 short: 2(4 ft) 8.0
2 internal: 2(4 ft) = 8.0
36.3 ft 12.3 plf = 0.45 K

+ misc bracing

⇒ Say W frame = 0.5 K

CHECKED VP DATE 7-11-02 | **DMJMH+N** ARCHITECTS–ENGINEERS 6501 Americas Parkway NE Suite 700 Albuquerque, NM 87110 | JOB NO. 3442.053.SCAL.009 Rev.A

APPROVED _____ DATE _____ | SHEET 26 OF _____

TITLE LDCC 2nd Floor Equipment Support | BY DAA DATE 7-6-02

#100256 CCN Chilled Water System Optimization Master Plan

LOADS TO FLOOR BEAMS

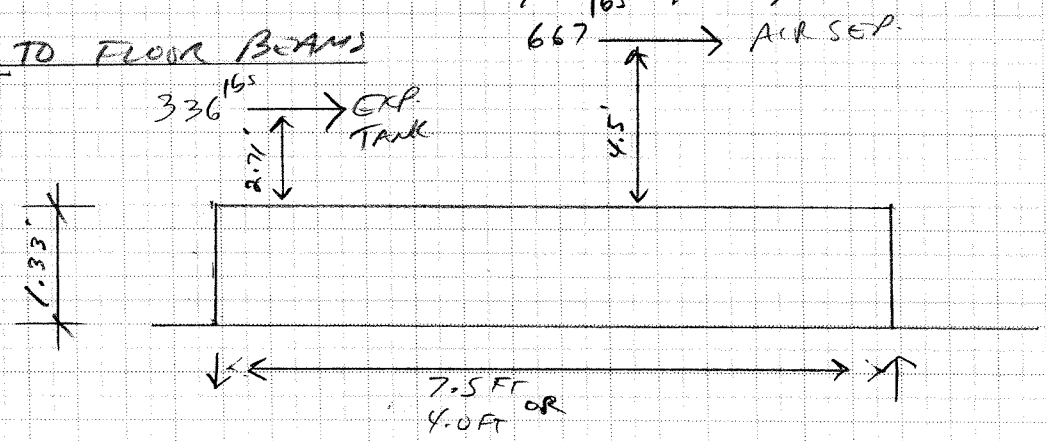

667 lbs (1.33 + 4.5)(ft) = 3888.6 lb.ft

336 lbs (1.33 + 2.71) ft = 1357.4 lb.ft

5246 lb.ft

Tor C ↑↓ @ 7.5 ft: F(7.5 ft) = 5246 lb.-ft

$F_{7.5}$ = 699 lbs

Tor C ↑↓ @ 4.0 ft: F(4.0 ft) = 5246 lb ft

$F_{4.0}$ = 1312 lbs. { split along 2 edges of FRAME

p. 25

Total DL = 500 lbs (frame) + 3367 lbs (air sep.) + 1868 lbs (exp. tank)

DL = 5735 lbs

Per leg, DL = 5735 lbs / 4 = 1434 lbs. ↓

4 platform legs

MAX FRAME C : $\frac{1312 \text{ lbs}}{2}$ + 1434 lbs = 2090 lbs.

(Comp.)

Seismic

DL

CHECKED ✓ DATE 7-11-02 | **DMJMH+N** ARCHITECTS–ENGINEERS 6501 Americas Parkway NE Suite 700 Albuquerque, NM 87110 | JOB NO. 3442.053-SCAL.009 Rev. A

APPROVED _____ DATE _____ | SHEET 27 OF _____

TITLE LDCC 2nd Floor Equipment Support | BY DAA DATE 7-6-02

100256 CCN Chiller Water System Optimization Master Plan

Simplify analysis : W24x84

Place 2900 lbs @ 8 FT from end of beam.

USE: $2090 + 1434 - \frac{1312}{2}$

$= 2900$ lbs all at 8 FT OK. ✓

$w = 1.25$ KLF

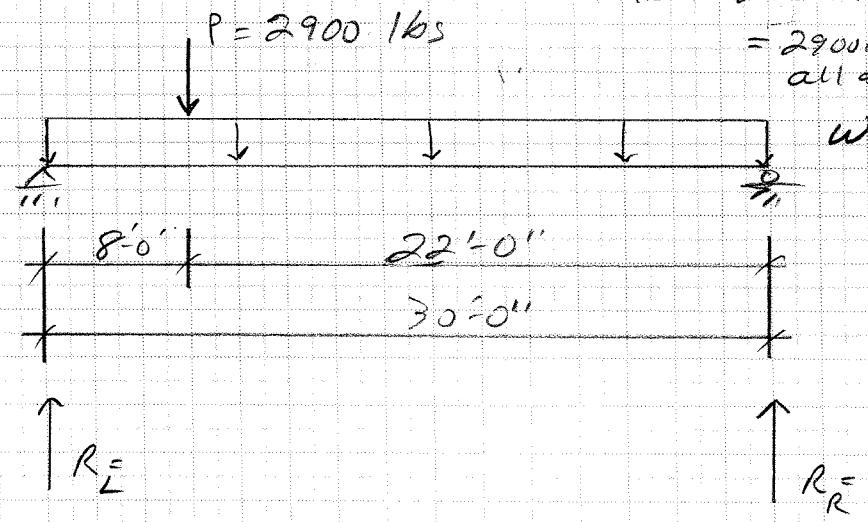

$R_L = (1.25^{KLF})(30\,FT)/2 + 2.9^K\,(22/30) = 28.38$

$R_R = (1.25\,KLF)(30\,ft)/2 + 2.9^K\,(8/30) = 22.02$

} Total ✓

from new loads $\begin{cases} R_L = 2.9^K(22/30) = 2.13^K \\ R_R = 2.9^K(8/30) = 0.77^K \end{cases}$

Per plans, connections designed for 55^K (min).

INCREASE as %: $2.13/55 = 3.8\%$, $\frac{28.38^K}{55^K} = 52\%$ of cap. OK. ✓

$f_{v_{Total}} = V/A_{web} = 28.38^K/(24)(0.515)\,in^2 = 2.3\,KSI$ OK, by insp.

$f_{v_{new\ load}} = 2.13/(24)(0.515)\,in^2 = 0.17\,KSI$ OK.

for SPEAR

CHECKED ✓ DATE 7-11-02 | DMJMH+N ARCHITECTS–ENGINEERS 6501 Americas Parkway NE Suite 700 Albuquerque, NM 87110 | JOB NO. 3442.053.SCAL.009 Rev. A

APPROVED _____ DATE _____ | SHEET 28 OF _____

TITLE LDCC 2nd Floor Equipment Support | BY DMA DATE 7-6-02

Simplify Analysis W 24 x 94 (cont.) #100256 CCW Chilled Water System Optimization Master Plan

$M_{@\ pt\ of\ eqpt\ load} = \frac{Pab}{L} = \frac{(2.9^{k})(8')(22')}{(30')}$ ASD 8th p. 2-298

$P = 2.9^{k}$ (p. 27)

$a = 8\ ft = 96\ in$

$b = 22\ ft = 264\ in$

$l = 30\ ft = 360\ in$

$E = 29000\ ksi$

$I_x = 2700\ in^4$

from new loads

$M_{@\ load} = 17.01\ k\text{-}ft\ (12\ in/ft) = 204.2\ k\text{-}in$

$f_{b/load} = M/S = (204.2\ k\text{-}in)/222\ in^3 = 0.92\ ksi$

exty loads

$M_{exty\ load} = \frac{wl^2}{8} = (1.75\ k/ft)(30\ ft)^2/8 = 196.9\ k\text{-}ft$

$= 2363\ k\text{-}in.$

$f_{b\ exty} = M/S = 2363\ k\text{-}in/222\ in^3 = 10.6\ ksi$

Conservative: add both loads ⇒ add Moments.

$f_{b\ Total} = (0.92 + 10.6)\ ksi = 11.52\ ksi$ ⇒ ok by inspection.

$F_b = 0.66 F_y = 0.66(36) = 23.76\ ksi$

OK for bending.

from new loads

Deflection:

$\Delta_{@\ load} = \frac{Pa^2b^2}{3EIl} = \frac{(2.9k)(96in)^2(264in)^2}{(3)(29000ksi)(2700in^4)(360in)} = 0.022\ inch$

$l/360 = 360\ in/360\ in = 1\ inch$

$\Delta_{load} = 0.022\ inch << l/360 = 1\ inch$ ⇒ ok for Deflection

Form SD901-82

AMTROL INC.

WEST WARWICK, RHODE ISLAND 02893

SUBMITTAL DATA

"L" SERIES (ASME)
EX-TROL® EXPANSION TANKS

3442.053.SCAL.009 Rev. A

2DCC 2nd Floor Equipment Support
#100256 CCN Chilled Water System
Optimization Master Plan

rec'd. 6-25-02
DAA
from DFW BP.

VA 7-11-02 29

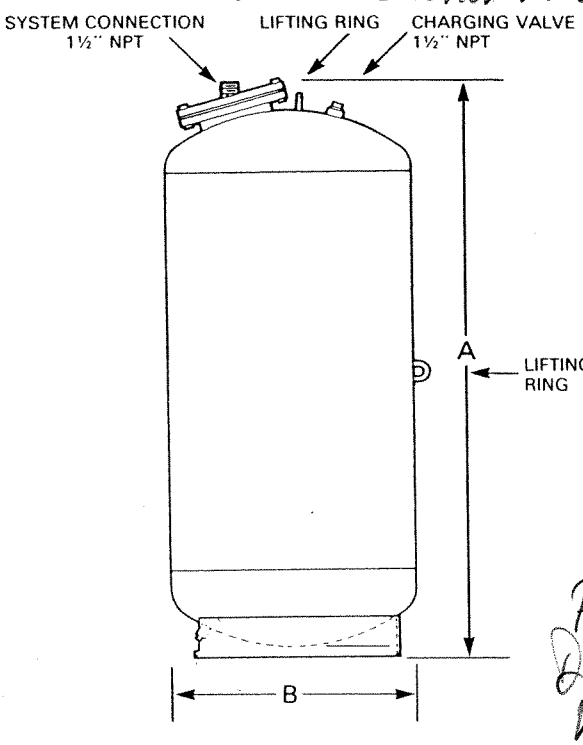

MODEL NUMBER	TANK VOLUME		"A" DIMENSION HEIGHT		"B" DIMENSION DIAMETER		SHIPPING WEIGHT	
	Gals.	Liters	Ins.	mm	Ins.	mm	Lbs.	kg
200-L	53	200	38⅜	975	24	610	204	93
300-L	79	300	52⅜	1330	24	610	250	113
400-L	105	400	66¼	1683	24	610	295	134
500-L	132	500	80¼	2038	24	610	340	154
600-L	158	600	65	1651	30	762	550	249
800-L	211	800	83	2108	30	762	680	308
1000-L	264	1000	73½	1867	36	914	760	345
1200-L	317	1200	85⅞	2181	36	914	864	392
1400-L	370	1400	98¼	2496	36	914	968	439
1600-L	422	1600	71¼	1810	48	1219	1580	717
2000-L	528	2000	85⅛	2162	48	1219	1810	821

From David Walker B&P
- Op. wt. 1868 lbs
- OK on Floor slab for mech.

MAXIMUM OPERATING CONDITIONS

Operating Temperature	240° F (115° C)
Working Pressure	125 PSIG (862 kPa)

MATERIALS OF CONSTRUCTION

Description	Standard Construction
Shell	Steel
Diaphragm	Heavy Duty Butyl

DESIGNED AND CONSTRUCTED PER ASME SECTION VIII
Allow 18" (460mm) Minimum Clearance for Piping

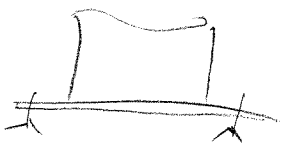

JOB NAME _____

LOCATION _____

_____

_____

ENGINEER _____

CONTRACTOR _____

CONTRACTOR P.O. NO. _____

SALES REPRESENTATIVE _____

MODEL NO. ORDERED _____

ASME CERTIFICATION REQUIRED _____ YES _____ NO

CHARGE PRESSURE _____ PSIG _____ kPa

Standard factory air charge is 12 PSIG, (80 kPa) unless otherwise specified.

Apple, David LDCC 2nd Floor Equipment Support 30

3442.053.SCAL.009
Rev. A
AAA 7-6-02
#100256 CLN Chilled Water System Optimization Master Plan ✓A 7-11-02

From: David Walker [DFW@bpce.com]
Sent: Tuesday, July 02, 2002 10:01 AM
To: Apple, David
Subject: LDCC/CCF Task 053

David:

I talked to the rep for the expansion tank. They can weld clips around the perimeter for bolting to the floor. They do this a lot in California. These clips or angles are not necessarily designed for seismic events because they don't have a structural engineer on board.

I suppose we could specify what we want and they could do it for use. I assume the clip angles are 1/4" steel. If we can design this with base plates and/or ring clips only would be good.

Hope this helps.

David Walker

√ 7-11-02

BELL & GOSSETT

SUBMITTAL

A-326G

LDCC 2nd Floor Equipment Support
#100256 CCN Chilled Water System Optimization Master Plan 31

JOB	B & G REPRESENTATIVE	
		DAX 7-6-02 3442.053.SCAL.009 Rev.A
UNIT TAG NO.	ORDER NO.	DATE
ENGINEER	SUBMITTED BY	DATE
CONTRACTOR	APPROVED BY	DATE

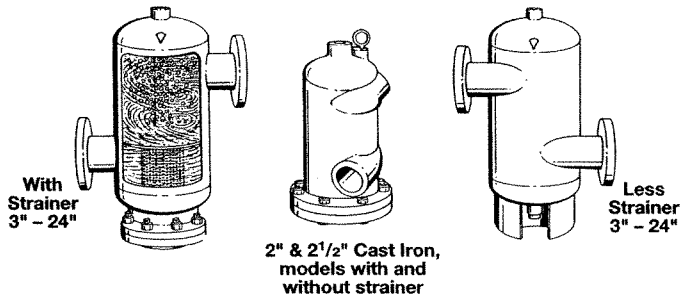

The ROLAIRTROL® Air Separator

Air Control and Elimination

DESCRIPTION

The Rolairtrol Air Separator is an ASME vessel designed with tangential openings to create a low velocity vortex where air is separated and removed from the circulating water.

MAXIMUM WORKING PRESSURE

125 PSIG (862 kPa)

MAXIMUM OPERATING TEMPERATURE

350°F (177°C)

CONSTRUCTION

- Designed and constructed per ASME Section VIII, Division I.
- Body – Models R-2, RL-2; R-2½, and RL-2½: Cast Iron.
- Shell – All other models: Steel.
- System Strainer ("R" Models only): Have galvanized steel strainers with 3/16" (4.8mm) diameter perforations with 51% open area.
- Air Collector Tube: Stainless steel with 5/32" (4mm) diameter perforations and 63% open area.
- Baffle/Collector Tube Support Assembly: Steel
- Bottom Reducing Flange Gasket ("R" models only): Arimide fiber.

SCHEDULE AND PERFORMANCE CHARACTERISTICS*

MODEL NO. & CAPACITY				SIZE OF TANGENTIAL OPENINGS INCHES		TAGGING INFORMATION	QUANTITY
WITH STRAINER		LESS STRAINER					
MODEL NO.**	GPM (M^3/Hr)	MODEL NO.	GPM (M^3/Hr)				
R-2N	56 (12.7)	RL-2N	56 (12.7)	2	NPT		
R-2½N	90 (20.4)	RL-2½N	90 (20.4)	2½			
R-3(N,F or G)(B)	190 (43.2)	RL-3(N,F or G)(B)	190 (43.2)	3	NPT, Flanged or Grooved		
R-4(F or G)(B)	300 (68.1)	RL-4(F or G)(B)	300 (68.1)	4	Flanged or Grooved		
R-5(F or G)(B)	500 (113.6)	RL-5(F or G)(B)	530 (120.4)	5			
R-6(F or G)(B)	700 (159.0)	RL-6(F or G)(B)	850 (193.0)	6			
R-8(F or G)(B)	1,300 (295.2)	RL-8(F or G)(B)	1,900 (431.5)	8			
R-10(F or G)(B)	2,000 (454.2)	RL-10(F or G)(B)	3,600 (817.6)	10			
R-12(F or G)(B)	2,750 (624.5)	RL-12(F or G)(B)	4,800 (1,090.1)	12			
R-14(F or G)(B)	3,400 (772.1)	RL-14(F or G)(B)	6,100 (1,385.3)	14			
R-16(F or G)(B)	4,400 (999.2)	RL-16(F or G)(B)	8,000 (1,816.8)	16			
R-18(F or G)(B)	5,200 (1,180.9)	RL-18(F or G)(B)	9,700 (2,202.9)	18			
R-20(F or G)(B)	6,300 (1,430.7)	RL-20(F or G)(B)	12,000 (2,725.2)	20			
R-22(F or G)(B)	7,400 (1,680.5)	RL-22(F or G)(B)	15,000 (3,406.5)	22			
R-24(F or G)(B)	8,500 (1,930.4)	RL-24(F or G)(B)	17,000 (3,860.7)	24			

*For 26"-36" sizes contact factory for performance characteristics.
**The Rolairtrol Air Separator must be selected with a connection type (N for NPT, F for flanged, G for grooved). If bracket supports are desired, add B at the end of the model number.

V.A 7-11-02

THE ROLAIRTROL AIR SEPARATOR (Air Control)

3442.053-SCAL.009 Rev.A AAA 7-6-02

LOCC 2nd Floor Equipment Support

32

DIMENSIONS & WEIGHTS

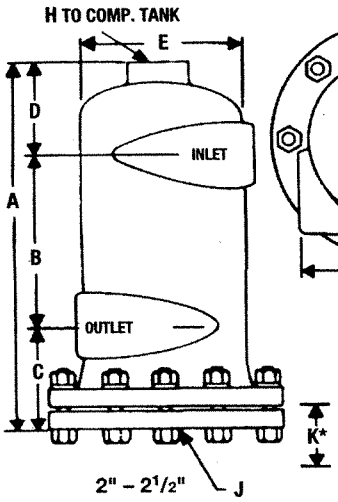

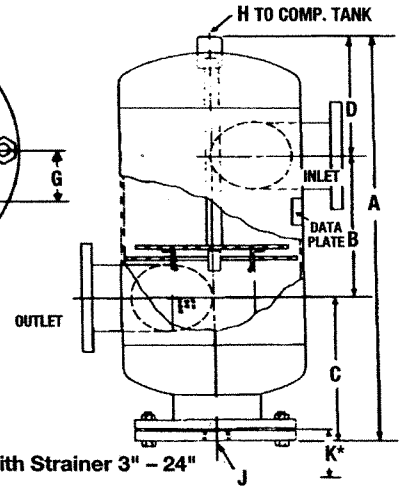

With Strainer 3" – 24"

*DISTANCE REQUIRED TO REMOVE STRAINER

Flange connections for field piping drilled and faced per 150# ANSI standards.

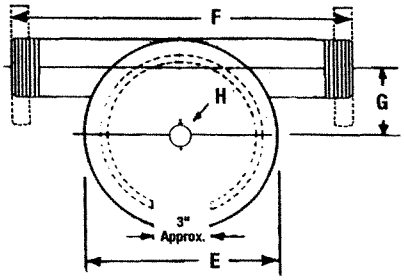

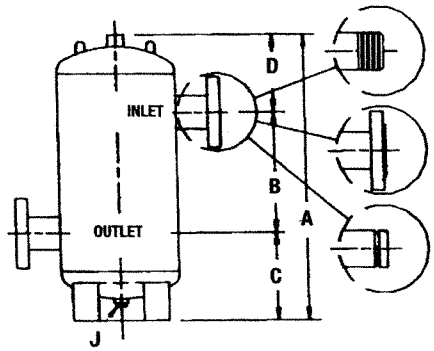

NOTE: 3" MODELS HAVE NPT NOZZLES

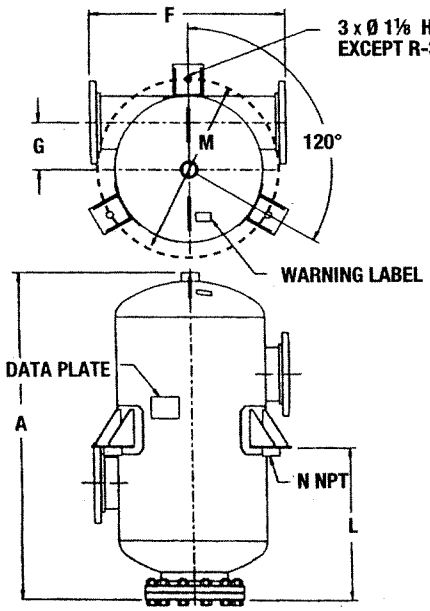

3"-24" MODEL WITH STRAINER AND OPTIONAL BRACKET SUPPORTS

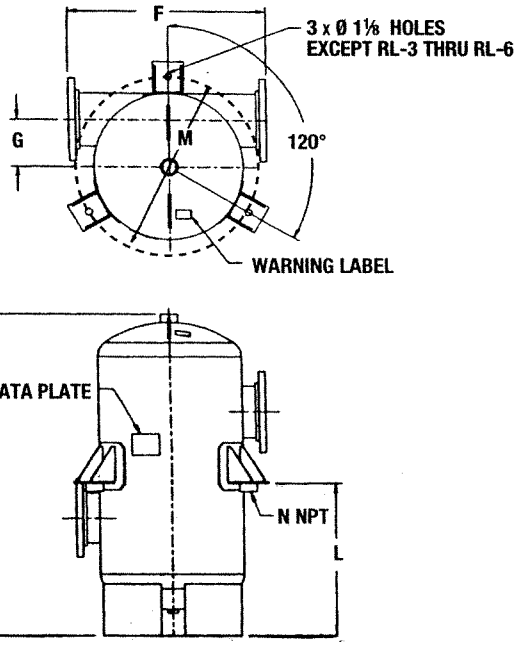

3"-24" MODEL LESS STRAINER AND OPTIONAL BRACKET SUPPORTS

SUPPORT NOTES

1. Model "R" Rolairtrol Air Separators have strainers which must be removed and cleaned after 24 hours operation, 30 days operation and as required to maintain proper system air separation. Before installing the model "R" Rolairtrol, refer to (K) in the dimensions and weights table (page 3), which notes minimum distances to be maintained between the blowdown connection and the floor or other equipment for strainer removal.
2. Rolairtrol sizes through an "R8" or "RL8" can be supported in the piping system as long as pipe hangers are attached to the tangential nozzles as close to the Rolairtrol shell as possible. Sizes larger than an "R8" or "RL8" will need to have additional supports such as a cradle under the Rolairtrol acting on a diameter as close to the Rolairtrol outside diameter as possible, or factory installed clips welded to the shell for overhead hanging, or floor mount support.
3. Lifting lugs are for the transportation and installation of the empty vessel, and are not to be used for complete or partial support of the flooded vessel.
4. The RL skirt can support flooded vessel weight, but an R model bottom flange (strainer housing) cannot support the flooded weight of the vessel.
5. Welding to the pressure vessel boundary will void the ASME stamp.

MODEL NUMBERING

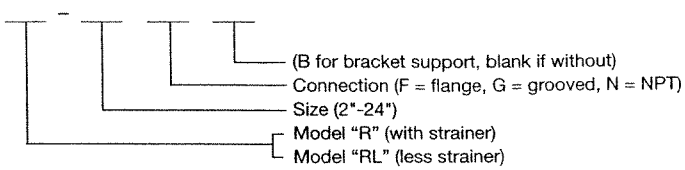

#100256 CCN Chilled Water System Optimization Master Plan

VA 7-11-02

2DCC 2nd Floor Equipment Support

3442.053.SCAL.009 Rev. A 7-6-02

CAPACITIES, DIMENSIONS & WEIGHTS* – ENGLISH (METRIC)

NOTE: These dimensions and weights are approximate. For certified dimensions and weights, contact the factory.

H100256 CCN Chilled Water System Optimization Master Plan

33

Model No.	Capacity GPM (M^3/Hr)	Size of Tangential Openings		A	B	C	D	E	F	Grooved F	G	H	J	K
				DIMENSIONS IN INCHES (mm)										
R-2	56 (12.7)	2	NPT	15 7/8 (403.2)	7 (177.8)	4 (101.6)	4 7/8 (123.8)	6 5/8 (168.3)	7 3/8 (187.3)	–	2 (50.8)	1 (25.4)	1 (25.4)	8 1/2 (215.9)
R-2 1/2	90 (20.4)	2 1/2		17 3/8 (441.3)	7 1/2 (190.5)	4 1/2 (114.3)	5 3/8 (136.5)	8 3/8 (212.7)	9 3/4 (247.7)	–	2 5/8 (66.7)			
R-3	190 (43.2)	3	FLG, NPT or Grv'd	25 11/16 (652.5)	8 (203.2)	9 5/8 (244.5)	8 1/16 (204.8)	10 3/4 (273.1)	16 3/4 (425.5)	16 3/4 (425.5)	3 11/16 (93.7)	1 1/4 (31.8)	1 1/2 (38.1)	12 (304.8)
R-4	300 (68.1)	4	Flanged or Grooved	30 3/4 (781.1)	10(254.0)	11 1/4 (285.8)	9 1/2 (241.3)	12 3/4 (323.9)	20 1/2 (520.7)	19 3/4 (501.7)	4 1/8 (104.8)	1 1/2 (38.1)	2 (50.8)	14 (355.6)
R-5	500 (113.6)	5		36 1/8 (917.6)	12 (304.8)	13 3/16 (335.0)	10 15/16 (277.8)	16 (406.4)	23 3/4 (603.3)	23 (584.2)	5 1/4 (133.4)			17 (431.8)
R-6	700 (159.0)	6		42 3/4 (1,085.9)	14 (355.6)	15 1/2 (393.7)	13 1/4 (336.6)	18 (457.2)	25 3/4 (654.1)	25 (635.0)	5 11/16 (144.5)			20 (508.0)
R-8	1,300 (295.2)	8		53 13/16 (1,366.8)	18 (457.2)	19 1/4 (489.0)	16 9/16 (420.7)	24 (609.6)	31 3/4 (806.5)	31 (787.4)	7 11/16 (195.3)	2 (50.8)		23 (584.2)
R-10	2,000 (454.2)	10		64 5/8 (1,641.5)	22 (558.8)	22 9/16 (573.1)	20 1/16 (509.6)	30 (762.0)	37 3/4 (958.9)	37 3/4 (958.9)	9 3/8 (244.5)			29 (736.6)
R-12	2,750 (624.5)	12		77 (1,955.8)	27 (685.8)	27 3/8 (695.3)	22 5/8 (574.4)	36 (914.4)	46 3/4 (1,187.5)	46 3/4 (1,187.5)	11 5/8 (295.3)			34 (863.6)
R-14	3,400 (772.1)	14		89 7/8 (2,282.8)	31 1/2 (800.1)	32 1/2 (825.5)	25 7/8 (657.2)	42 (1,066.8)	54 1/2 (1,384.3)	54 1/2 (1,384.3)	14 (355.6)			37 (939.8)
R-16	4,400 (999.2)	16		102 3/4 (2,609.9)	36 (914.4)	36 1/2 (927.1)	30 1/4 (768.4)	48 (1,219.2)	62 1/2 (1,587.5)	62 1/2 (1,587.5)	16 (406.4)			42 (1,066.8)
R-18	5,200 (1,180.9)	18		123 (3,124.2)	40 1/2 (1,028.7)	44 3/4 (1,136.7)	37 3/4 (958.9)	54 (1,371.6)	70 1/4 (1,784.4)	70 1/4 (1,784.4)	18 (457.2)			52 (1,320.8)
R-20	6,300 (1,430.7)	20		135 7/8 (3,451.2)	45 (1,143.0)	49 1/8 (1,247.8)	41 3/4 (1,060.5)	60 (1,524.0)	78 (1,981.2)	78 (1,981.2)	20 (508.0)			56 (1,422.4)
R-22	7,400 (1,680.5)	22		148 1/8 (3,762.4)	49 5/8 (1,260.5)	52 3/4 (1,339.9)	45 3/4 (1,162.1)	66 (1,676.4)	85 7/8 (2,181.2)	85 7/8 (2,181.2)	22 (558.8)			60 (1,524.0)
R-24	8,500 (1,930.4)	24		159 3/8 (4,048.1)	54 (1,371.6)	56 1/8 (1,425.6)	49 1/4 (1,251.0)	72 (1,828.8)	93 1/2 (2,374.9)	93 1/2 (2,374.9)	24 (609.6)			64 (1,625.6)
RL-2	56 (12.7)	2	NPT	15 7/8 (403.2)	7 (177.8)	4 (101.6)	4 7/8 (123.8)	6 5/8 (168.3)	7 3/8 (187.3)	–	2 (50.8)	1 (25.4)	1 (25.4)	N/A
RL-2 1/2	90 (20.4)	2 1/2		17 3/8 (441.3)	7 1/2 (190.5)	4 1/2 (114.3)	5 3/8 (136.5)	8 3/8 (212.7)	9 3/4 (247.7)	–	2 5/8 (66.7)			
RL-3	190 (43.2)	3	FLG, NPT or Grv'd	26 7/8 (682.8)	8 (203.2)	10 13/16 (274.6)	8 1/16 (204.8)	10 3/4 (273.1)	16 3/4 (425.5)	16 3/4 (425.5)	3 11/16 (93.7)	1 1/4 (31.8)		
RL-4	300 (68.1)	4	Flanged or Grooved	31 7/16 (798.6)	10 (254.0)	12 (304.8)	9 7/16 (239.7)	12 3/4 (323.9)	20 1/2 (520.7)	19 3/4 (501.7)	4 1/8 (104.8)	1 1/2 (38.1)		
RL-5	530 (120.4)	5		37 (939.8)	12 (304.8)	14 (355.6)	11 (279.4)	16 (406.4)	23 3/4 (603.3)	23 (584.2)	5 1/4 (133.4)			
RL-6	850 (193.0)	6		44 1/16 (1,119.1)	14 (355.6)	16 13/16 (427.0)	13 1/4 (336.3)	18 (457.2)	25 3/4 (654.1)	25 (635.0)	5 11/16 (144.5)			
RL-8	1,900 (431.5)	8		54 1/2 (1,384.3)	18 (457.2)	20 (508.0)	16 1/2 (419.1)	24 (609.6)	31 3/4 (806.5)	31 (787.4)	7 11/16 (195.3)	2 (50.8)		
RL-10	3,600 (817.6)	10		64 11/16 (1,643.1)	22 (558.8)	22 3/4 (577.9)	19 15/16 (506.4)	30 (762.0)	37 3/4 (958.9)	37 3/4 (958.9)	9 5/8 (244.5)			
→ RL-12	4,800 (1,090.1)	12		75 7/8 (1,914.7)	27 (685.8)	25 3/4 (654.1)	22 5/8 (574.8)	36 (914.4)	46 3/4 (1,187.5)	46 3/4 (1,187.5)	11 5/8 (295.3)			
RL-14	6,100 (1,385.3)	14		95 (2,413.0)	31 1/2 (800.1)	35 (889.0)	28 1/2 (723.9)	42 (1,066.8)	54 1/2 (1,384.3)	54 1/2 (1,384.3)	14 (355.6)			
RL-16	8,000 (1,816.8)	16		105 3/4 (2,686.1)	36 (914.4)	38 1/8 (968.5)	31 5/8 (803.4)	48 (1,219.2)	62 1/2 (1,587.5)	62 1/2 (1,587.5)	16 (406.4)			
RL-18	9,700 (2,202.9)	18		123 (3,124.2)	40 1/2 (1,028.7)	44 3/4 (1,136.7)	37 3/4 (958.9)	54 (1,371.6)	70 1/4 (1,784.4)	70 1/4 (1,784.4)	18 (457.2)			
RL-20	12,000 (2,725.2)	20		135 7/8 (3,438.5)	45 (1,143.0)	48 5/8 (1,235.2)	41 3/4 (1,060.5)	60 (1,524.0)	78 (1,961.2)	78 (1,981.2)	20 (508.0)			
RL-22	15,000 (3,406.5)	22		148 (3,759.2)	49 5/8 (1,260.5)	52 5/8 (1,336.8)	45 3/4 (1,162.1)	66 (1,676.4)	85 7/8 (2,182.2)	85 7/8 (2,182.2)	22 (558.8)			
RL-24	17,000 (3,860.7)	24		159 7/8 (4,048.1)	54 (1,371.6)	56 1/8 (1,425.6)	49 1/4 (1,251.0)	72 (1,828.8)	93 1/2 (2,374.9)	93 1/2 (2,374.9)	24 (609.6)			

Model No.	Capacity GPM (M^3/Hr)	Size of Tangential Openings		L	M	N	Cv	Strainer Free Area in Sq. Inches (mm^2)	Weight of Brackets in Lbs. (Kg)	Approx. Volume in Gallons (Ltr.)	Approx. Shpg.Wt. in. Lbs. (Kg)	Flood Wt. Less Bracket in Lbs. (Kg)
				DIMENSIONS IN INCHES (mm)								
R-2	56 (12.7)	2	NPT	N/A	N/A	N/A	44	32 (20,645.1)	N/A	2 (7.6)	55 (25.0)	70 (31.8)
R-2 1/2	90 (20.4)	2 1/2					64	45 (29,032.2)		3 (11.4)	90 (40.9)	115 (52.2)
R-3	190 (43.2)	3	FLG, NPT or Grv'd	12 1/4 (311.2)	14 1/8 (358.8)	2	80	66 (42,580.6)	9 (4.1)	7 (26.5)	95 (43.2)	155 (70.3)
R-4	300 (68.1)	4	Flanged or Grooved	14 11/16 (373.1)	16 1/8 (409.6)		135	140 (90,322.4)		13 (49.2)	165 (75.0)	270 (122.5)
R-5	500 (113.6)	5		17 5/8 (447.7)	19 3/8 (492.1)		215			25 (94.6)	220 (100.0)	425 (192.8)
R-6	700 (159.0)	6		20 13/16 (528.6)	21 3/8 (542.9)		305	220 (141,935.2)		34 (128.7)	300 (136.4)	580 (263.1)
R-8	1,300 (295.2)	8		25 5/16 (642.9)	29 1/2 (749.3)		532	310 (199,999.6)	29 (13.2)	90 (340.7)	460 (209.1)	1,215 (551.1)
R-10	2,000 (454.2)	10		31 9/16 (801.7)	35 1/2 (901.7)		850	435 (280,644.6)		150 (567.8)	860 (390.9)	2,115 (959.4)
R-12	2,750 (624.5)	12		39 1/4 (997.0)	41 1/2 (1,054.1)		1,180	590 (380,644.4)	32 (14.5)	291 (1,101.6)	1,200 (545.5)	3,630 (1,646.6)
R-14	3,400 (772.1)	14		40 7/8 (1,038.2)	48 1/2 (1,231.9)	3	1,445	715 (461,289.4)	56 (25.4)	506 (1,915.4)	1,780 (809.1)	6,000 (2,721.6)
R-16	4,400 (999.2)	16		49 (1,244.6)	54 1/2 (1.384.3)		1,885	919 (592,902.0)		764 (2,892.0)	2,425 (1,102.3)	8,800 (3,991.7)
R-18	5,200 (1,180.9)	18		61 5/8 (1,565.3)	60 5/8 (1,539.9)		2,340	1,521 (981,288.4)	63 (28.6)	1,173 (4,440.3)	3,410 (1,550.0)	13,200 (5,987.5)
R-20	6,300 (1,430.7)	20		68 5/8 (1,743.1)	66 3/4 (1,695.5)	4	2,945	1,989 (1,283,223.2)	78 (35.4)	1,647 (6,234.6)	5,310 (2,413.6)	19,055 (8,643.4)
R-22	7,400 (1,680.5)	22		74 1/4 (1,882.8)	72 3/4 (1,847.9)		3,725	2,322 (1,498,061.5)		2,070 (7,835.8)	6,400 (2,909.1)	23,680 (10,741.3)
R-24	8,500 (1,930.4)	24		80 3/8 (2,041.5)	79 (2,006.6)		4,325	2,841 (1,832,899.6)	98 (44.5)	2,639 (9,989.7)	7,530 (3,422.7)	29,560 (13,408.4)
R-2	56 (12.7)	2	NPT	N/A	N/A	N/A	55	N/A	N/A	2 (7.6)	50 (22.7)	65 (29.5)
RL-2 1/2	90 (20.4)	2 1/2					80			3 (11.4)	85 (38.6)	110 (49.9)
RL-3	190 (43.2)	3	FLG, NPT or Grv'd	13 3/8 (339.7)	14 1/8 (358.8)	2	215		9 (4.1)	7 (26.5)	65 (29.5)	120 (54.4)
RL-4	300 (68.1)	4	Flanged or Grooved	15 3/8 (390.5)	16 1/8 (409.6)		370			13 (49.2)	100 (45.5)	210 (95.3)
RL-5	530 (120.4)	5		18 1/2 (469.9)	19 3/8 (492.1)		580			25 (94.6)	160 (72.7)	365 (165.6)
RL-6	850 (193.0)	6		22 1/8 (562.0)	21 3/8 (542.9)		850			36 (136.3)	205 (93.2)	505 (229.1)
RL-8	1,900 (431.5)	8		26 (660.4)	29 1/2 (479.3)		1,445		29 (13.2)	87(329.3)	400 (181.8)	1,130 (512.6)
RL-10	3,600 (817.6)	10		31 5/8 (803.3)	35 1/2 (901.7)		2,340			162 (613.2)	630 (286.4)	1,985 (900.4)
→ RL-12	4,800 (1,090.1)	12		37 5/8 (955.7)	41 1/2 (1,054.1)		3,300		32 (14.5)	282 (1,067.5)	980 (445.5)	3,335 (1,512.8)
RL-14	6,100 (1,385.3)	14		46 (1,168.4)	48 1/2 (1,231.9)	3	3,900		56 (25.4)	472 (1,786.7)	1,700 (772.7)	5,640 (2,558.3)
RL-16	8,000 (1,816.8)	16		52 (1,320.8)	54 1/2 (1,384.3)		5,100			723 (2,736.8)	2,325 (1,056.8)	8,360 (3,792.1)
RL-18	9,700 (2,202.9)	18		61 5/8 (1,565.3)	60 5/8 (1,539.9)		6,410		63 (28.6)	1,149 (4,349.4)	3,275 (1,488.6)	12,875 (5,840.1)
RL-20	12,000 (2,725.2)	20		68 (1,727.2)	66 3/4 (1,695.5)	4	8,000		78 (35.4)	1,577 (5,969.6)	5,140 (2,336.4)	18,300 (8,300.9)
RL-22	15,000 (3,406.5)	22		73 5/8 (1,870.1)	72 3/4 (1,847.9)		10,000			1,958 (7,411.8)	6,190 (2,813.6)	22.530 (10,219.6)
RL-24	17,000 (3,860.7)	24		80 (2,032.0)	79 (2,006.6)		11,700		98 (44.5)	2,463 (9,323.4)	7,465 (3,393.2)	28,020 (12,709.9)

*For 26"-36" sizes, contact factory for capacities, dimensions and weights.

LDCL 2nd Floor Equipment Support
#100256 CEN Chilled Water System
Optimization Master Plan

3442.053-SCAL-009
Rev. A
By DAA 7-6-02
VA 7-11-02

34

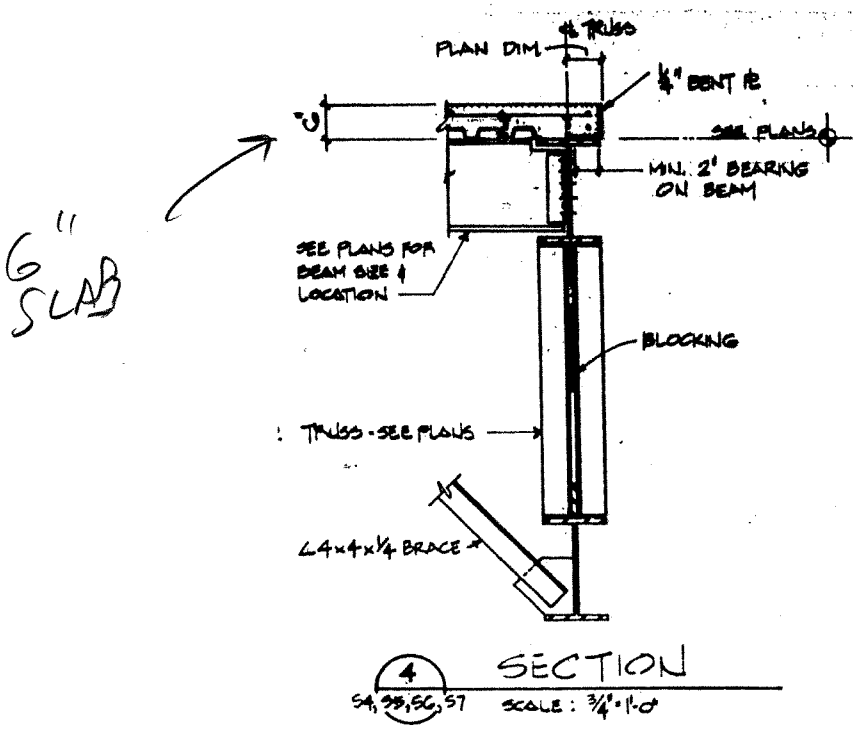

4 SECTION
S4, S5, S6, S7 SCALE: 3/4" = 1'-0"

From S-8

Lab Job 7050-3
ENG-C-45225
Laboratory Data
Communications Center
by: FMBSM