3442.083.SCAL.001
REV. A

ORIG: [illegible]

DATE: 6/20/02

CKR: [illegible]

DATE: 6.20.02

p. 6

SECTION A
DEMOLITION AND GRATE SUPPORT DESIGN
10 PAGES INCLUDING COVER

Holmes & Narver | Raytheon **DESIGN CALCULATION SHEET**	Project No. TASK ORDER 83 100256 Page: 7
Calculation No.3442.083.SCAL.001 Rev. A	Performed By: DAVID APPLE Date: 6-20-02
Calculation Title: LDCC TOWER STRUCTURAL MODIFICATIONS Project: 100256 LDCC COOLING TOWER IMPROVEMENTS	Checked By: BOB PLATT Date: 6.20.02

INDEX

SECTION A **PAGE**

Project Communication Dated 5/29/02 8

Demolition Discussion and Data 9

Sketch of Sump Grating Support Locations 10

Grate Support Design and Detail Sketches . . . . . 11 - 15

3442.083.SCAL.001
Rev. A
DWA 6/15/02

LDCC TOWER STRUCTURAL MODIFICATIONS

100256 LDCC Cooling Tower Improvements RJ 6.20.02

8

Holmes & Narver | Raytheon

PROJECT COMMUNICATIONS

DATE:	5/29/02	LOCATION	LANL - LDCC
JOB #	3442.083.WPLN.001	PHONE	505-883-4111
JOB NAME	LDCC Cooling Tower Improvements	VERBAL	Meeting@CCF Jim Frybarger's office
RECORDER:	Mike Slaman	EMAIL	mas@bpce.com

ATTENDEES: Doug Hefele, Jim Frybarger, Rick Rivera, Dwight Dorsey

SUBJECT: Discuss LDCC Cooling Tower Improvements.

DISCUSSION: The following decisions were made regarding the cooling tower improvements project:

1. Manual removal of debris from the sump is preferred in lieu of pumping debris. No strainers will be provided.
2. A sump pump will be provided to drain the sump in approx. one hour. Permanent piping will be installed in each sump. The piping will either serve to drain the sump or transfer water to the active sump from the sump being drained. The permanent pipe will be attached in such a manner that it can be lowered or raised to locate the suction above the debris. The pump will be sized for approx. 65 gpm.
3. Small amounts of water left in the sump will be pumped out by the clean up crew using a small portable pump.
4. The divider wall construction and means of attachment to the existing sump should be reviewed to make sure there is no leakage between the new wall and the existing structure. Removal of the gate structures back to the original sump wall and surfaces is preferred. The water deflector will remain as designed.
5. The jib crane will remain as designed.
6. A short discussion on considering provisions for variable frequency drives on the tower pumps to match actual loads conditions was concluded by confirmation that the present control scenario is adequate.
7. The existing agitator lines will be modified to provide two outlets directing water into the lower sump. A 1" valved bypass line will be installed between agitator lines to make water available when a sump is being cleaned.

HNR TEAM DESIGN CALCULATION SHEET	Calc. #: 3442.083 SCAC-001 Rev: A Page: 4 of 9	
Design Calculation Title: LDCC Tower Structural Modifications	Orig: DAA	Date: 6/5/02
Project No. & Title: 100256 LDCC Cooling Tower Improvements	Checker: KJP	Date: 6.20.02

Demolition & Sump Grate Supports

1- Project Communication: prev. page in calcs

Item 4: Remove concrete to original surfaces.

2. See demo drawings for removals, part of project plan set, included in Appendix.

3. Grate in sump area will require new supports since the demo required will eliminate exty concrete support.

4. Grate supports (or dugs provided from LANL) w.r.t. previous modifications - new support of steel.

5. GRATING TO BE SUPPORTED: 1 3/4" Figlass grating. Assume w = 15 psf. (sim. as steel, ok to assume.) ✓

6. GRATING SPAN DATA: Reuse existing - replace in same orientation & location

$L_1 = 5'-6"$

$L_2 = 7'-10\frac{1}{2}"$, SAY 8'

WIDTH = 3'-2"

LOAD: ASSUME 100 psf LL. OK. ✓

SPAN: Support along long dimension ⇒

SPAN = 3'-2" (width of exty grating).

GRATING WIDTH 3'-2" from dwgs (See S3 3/3 Appendix)

5'-6" SUPPORT - NEW

7'-10½" SUPPORT - NEW

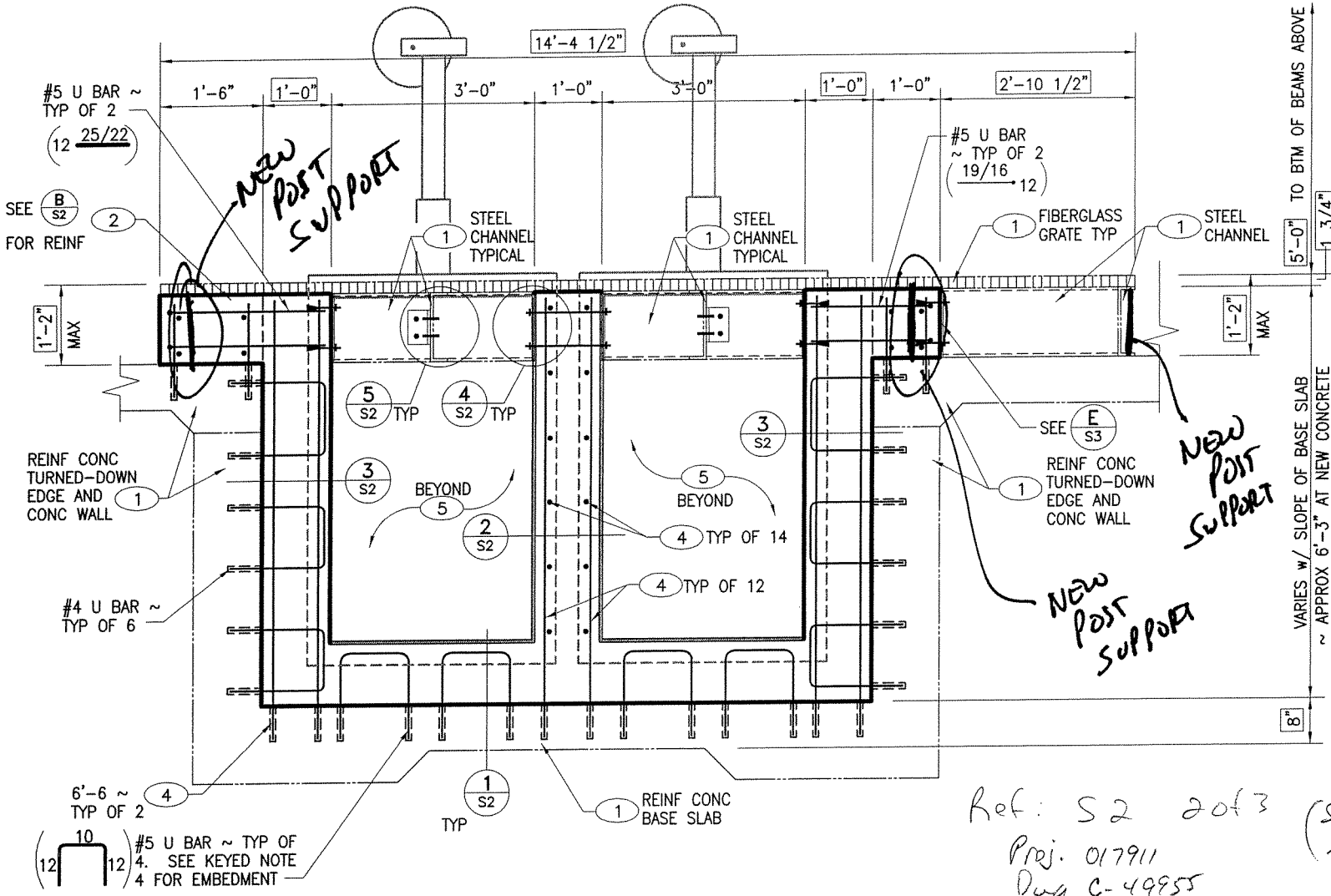

Ref: S2 2 of 3 (See Appendix)
Proj. 017911
Dwg C-49955

LDCC Tower Structural Modifications
100258 LDCC Cooling Tower Improvements

3442.003.SCAL.001
Rev. A
BBA 6/15/02
KSP 6.20.02

10

7. Design grate support beam:

$L = 8' = 96''$

$w = 100\,psf\,(3.17\,ft)(1/2) + 15\,psf + \text{self wt.}$

$w = 173.5 + \text{self wt.}$

Say self wt = 26.5 lbs Recheck after member selection.

$w = 200\,plf$

$M = wl^2/8 = (200\,lbs/ft)(8\,ft)^2/8$

$M = 1.6\,K\text{-}FT$

Deflection: SAY $\Delta \le L/360$

$\Delta max = 8(12)/360 = 0.27\,inch$

Simple span unif. load: $\Delta_{max} = 5wl^4/384\,EI$

$$I_{min\,req.} = \frac{5wl^4}{384E(\Delta\,max\,allow.)}$$

SAY $\Delta max\,allow. = 0.25''$ ok.

$$I_x \ge \frac{(5)(200\,\frac{lbs}{ft})(\frac{1\,ft}{12\,inch})(96\,in)^4}{(384)(29\,000\,000\,lbs/in^2)(0.25\,inch)} = 2.54\,in^4$$

NEED $I_x \ge 2.54\,in^4$ for $\Delta \le l/360$

Try: C8x11.5 $I_x = 32.6\,in^4$ $S_x = 8.14\,in^3$ 11.5 plf

Prefer a strong channel to provide some support to valve operators - additional bracing from this channel will support/brace operators (valve operators).

7. (Continued)

Check bending: $F_y = 36$ ksi

$F_b = 0.6 F_y = 0.6(36) = 21.6$ ksi.

$f_b = M/S = (1.6 \text{ k-ft})(12 \text{ inch/ft}) / 8.14 \text{ in}^3 = 2.4$ ksi

$(f_b = 2.4 \text{ ksi}) \leq (F_b = 21.6 \text{ ksi}) \Rightarrow$ ok. for bending.

Check deflection:

$$\Delta = \frac{(5)(173 + 11.5)\frac{\text{lbs}}{\text{ft}} \times \frac{1\text{ft}}{12\text{inch}} \quad (96\text{in})^4}{(384)(29000000 \text{ psi})(32.6 \text{ in}^4)} = 0.02 \text{ inch}$$

ok.

∴ USE C 8X11.5 GALVANIZED.

8. Design support posts for worst case:

Area to support 8' x 3'-2" = 25.3 ft²

Total Load = (100 psf + 15 psf) (25.3 ft²) = 2913 lbs.
GRATINGS

SAY W_{TOTAL} = 3000 lbs.

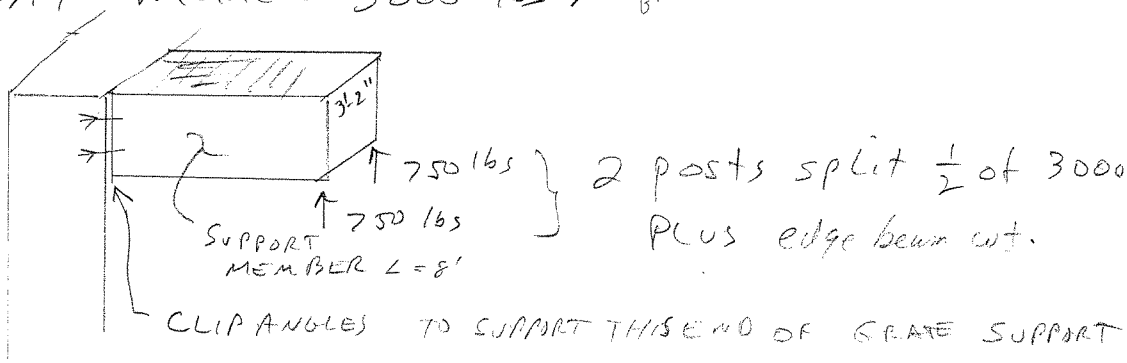

2 posts split ½ of 3000 lbs. PLUS edge beam wt.

USE TS for posts ⇒ easy to connect channel edge beam and angle edge beam

provide lateral stiffness for operator bracing that frames into channels.

USE TS: ASTM A500 Type B F_y = 46 ksi — normally stocked per ASD 9th p. 1-92 Tbl. 3

Try: TS 2x2x1/4 GALVANIZED — A = 1.59 in², r = 0.694 in — ASD 9th p. 1-96

L = 1'-2 (max) − 1 3/4" − base plate thickness.
(per latest dwgs)

Say L = 12" K = 1

Kl/r = (1)(12 inch)/0.694 in = 17.29 = small. Buckling N/A. & Loads small.

HNR TEAM DESIGN CALCULATION SHEET	Calc. #: 3442.083.SCAL.001 Rev: A Page: of 14	
Design Calculation Title: LDCC Tower Structural Modifications	Orig: GAA	Date: 6/25/02
Project No. & Title: 100256 LDCC Cooling Tower Improvements	Checker: [illegible]	Date: 6.20.02

8.-(cont.)

$$P = \underset{(LL)}{750\ lbs} + 8ft(11.5\ plf)(1/2) + (8ft)(3.17)(15\ psf)(1/2)(1/2)$$

(channel; grate)

$= 891\ lbs.$

Say $P = 900\ lbs.$

$f_a = P/A = (0.900\ k)/(1.59\ in^2) = 0.6\ ksi \Rightarrow$ OK. Small. ✓

9. Anchorage to center (new) concrete wall.

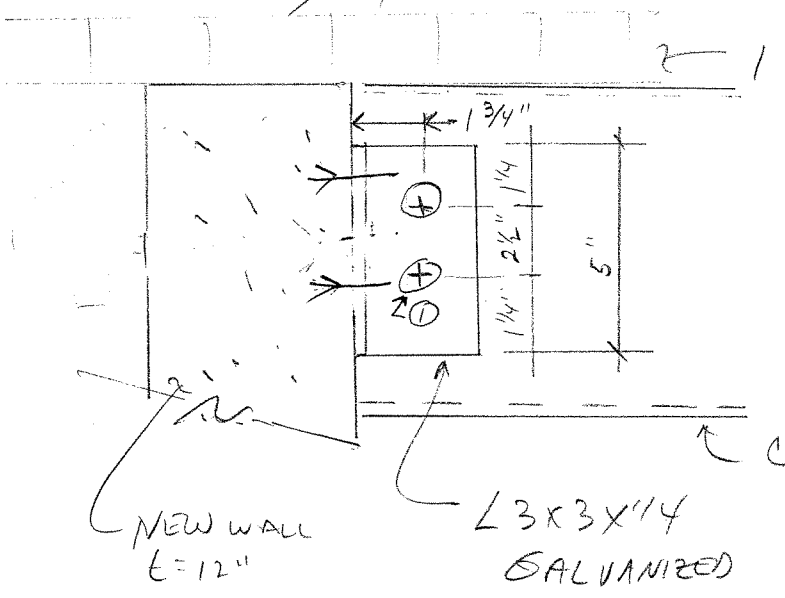

① 1/2" Ø SS. BOLT, NUT, LOCK WASHER, (TYP. OF 2) OR WELD AT CONTRACTORS OPTION

② HILTI 304 SS KWIK BOLT II 3/8" DIA., STANDARD DEPTH OF EMBEDMENT

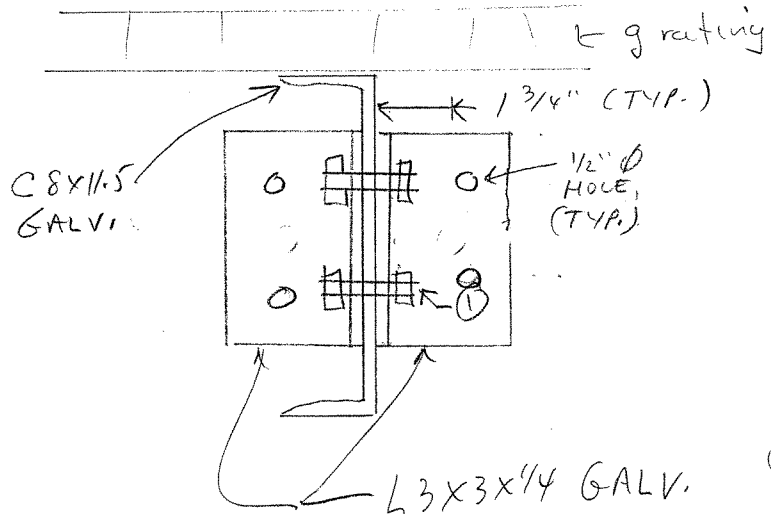

Capacity Ten = 1250 lbs, Shear = 1330 lbs } f'c = 4ksi

SAME ANCHOR AS FOR DIVERTER R. ✓

OK.

$V_{act.} = \frac{900\ lbs}{2} = 450$

$V_{all} = 1330\ lbs.$

$FS = 2.9$ ok.

10. POST BASE PLATE & Anchors:

PL 1/4 x 6 x 6 (GALV.)

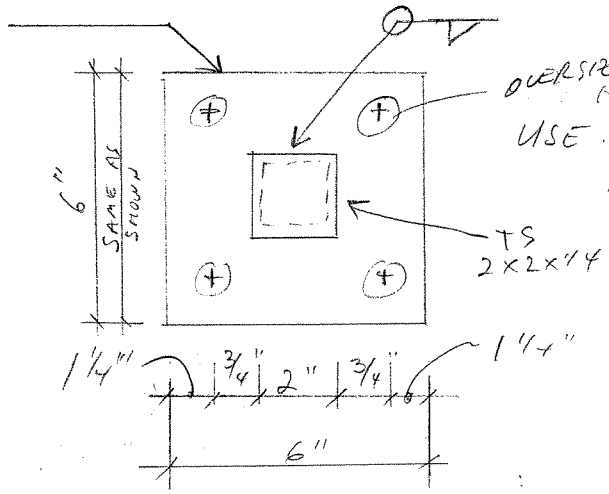

OVERSIZE HOLE FOR 3/8" Ø BOLT (1/2" Ø hole)
USE: HILTI 304 SS KWIK BOLT II #00230395
KB II 304 SSCF 3/8-3
(see appendix - divider plate)

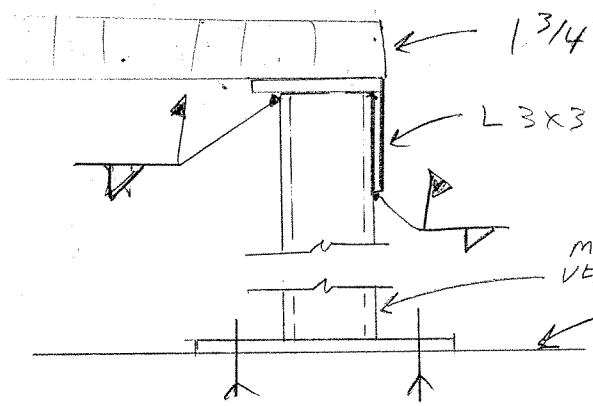

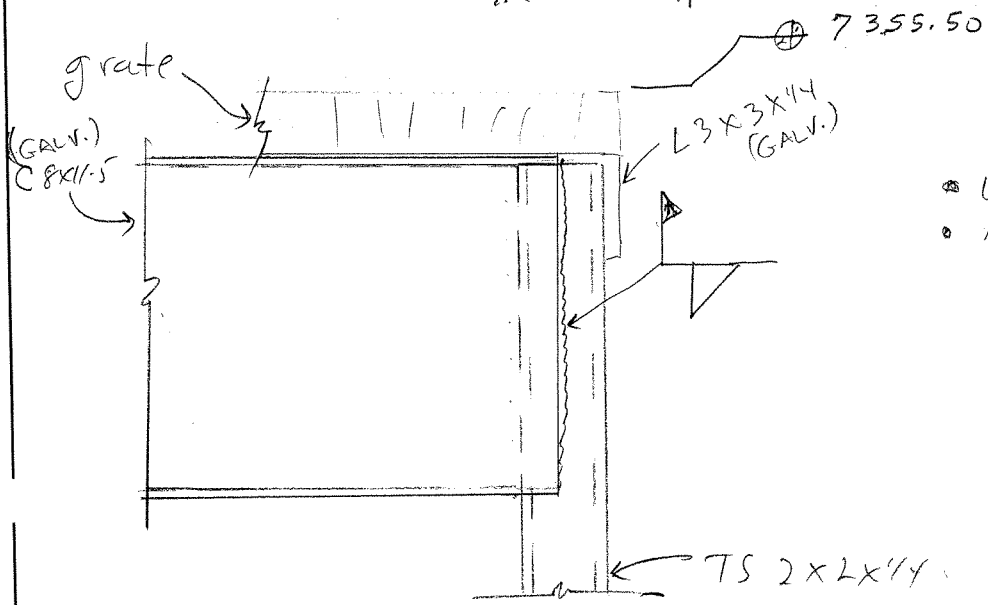

- WELD AT END
- AT CENTER POST - THRU-BOLT w/ 2 ~ 1/2" Ø SS BOLTS, NUT, LOCKWASHER (OR WELD) OK.

(Channel extends beyond center post to end post - SEE PLANS FOR DETAILS OF THIS)