3442.083.SCAL.001
REV. A

ORIG: DAO

DATE: 6/20/02

CKR: RS

DATE: 6.20.02

p. 16

SECTION B
DIVERTER PLATE DESIGN
12 PAGES INCLUDING COVER

INDEX

SECTION B	PAGE
Sketch of Limits of Diverter Plate	18
Sketch of Existing Diverter Plate over Sump Grating Area	19
Sketchs of New Diverter Plate	20 - 21
Diverter Plate Design	22 - 27

COOLING TOWER MODIFICATIONS 3442.083-SCAL-001 (18)

100256 LDCC Cooling Tower Improvements

LDCC Tower Structural Modifications REV. A

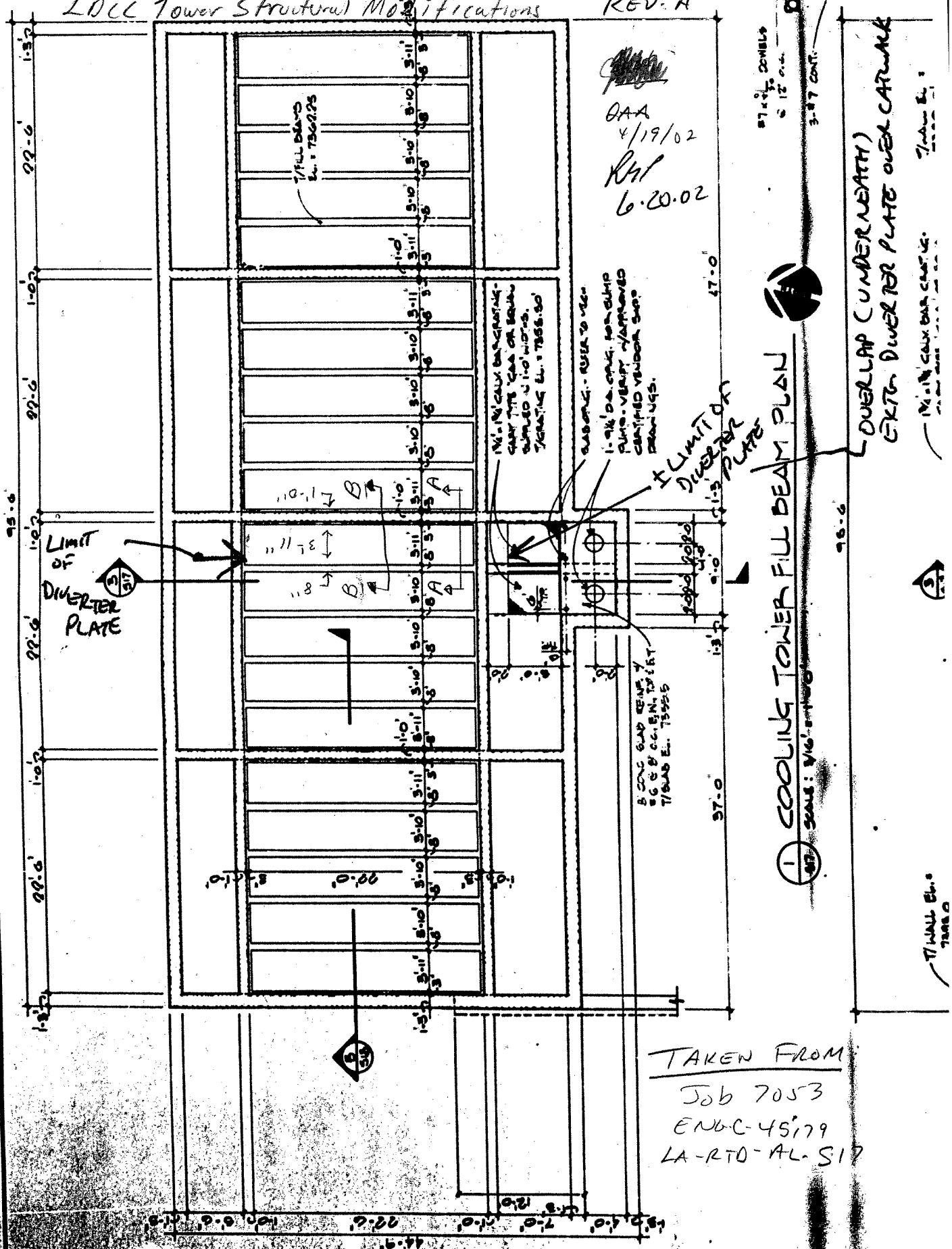

TAKEN FROM:
Job 7053
ENG-C-45179
LA-RTO-AL-S17

HNR TEAM

DESIGN CALCULATION SHEET

Calc. #: 3442.083.SCAL.001
Rev: A
Page: 4 of 19

Design Calculation Title: LDCC STRUCTURAL TOWER MODIFICATIONS	Orig: DAA	Date: 4/19/02
Project No. & Title: 100256 LDCC Cooling Tower Improvements	Checker: RLP	Date: 6.20.02

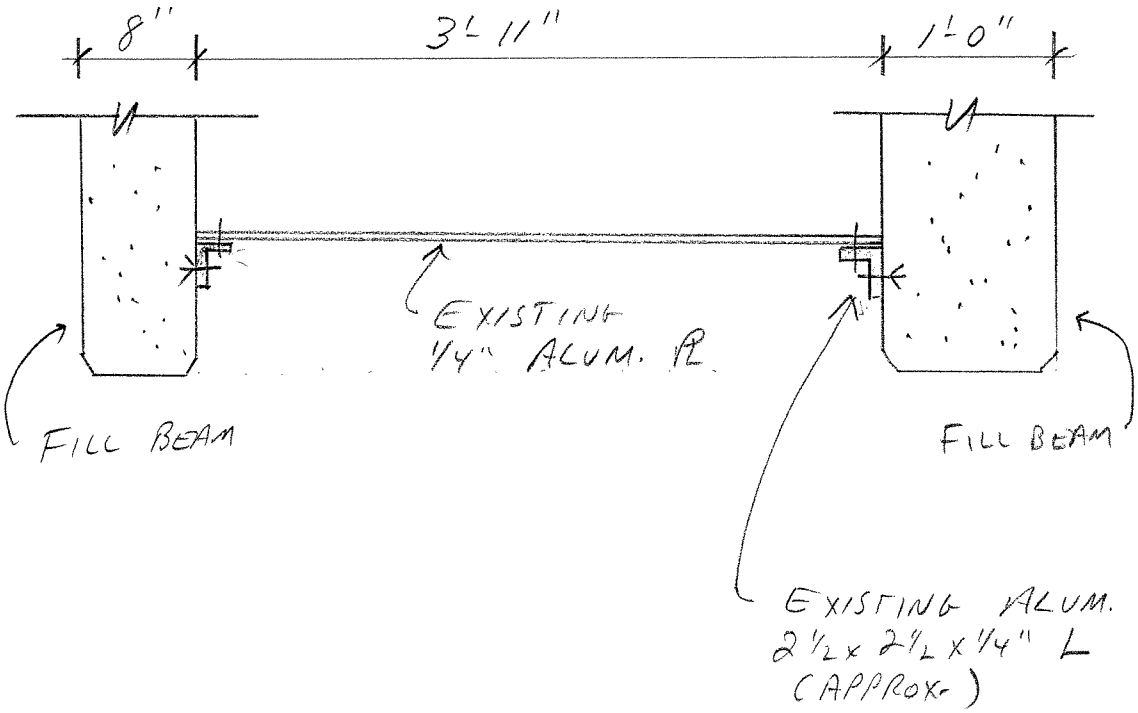

A-A: SECTION OVER EXISTING CATWALK

N.T.S.

This section shows the existing "diverter" to divert water from above the catwalk. This diverter is overhead when standing at the gate-valve control.

HNR TEAM

DESIGN CALCULATION SHEET

Calc. #: 3442.083.SCAL.001
Rev: A
Page: [redacted] of 20

Design Calculation Title: STRUCTURAL LDCC Tower Modifications	Orig: DAA	Date: 4/19/02
Project No. & Title: 100256 LDCC Cooling Tower Improvements	Checker: RGP	Date: 6.20.02

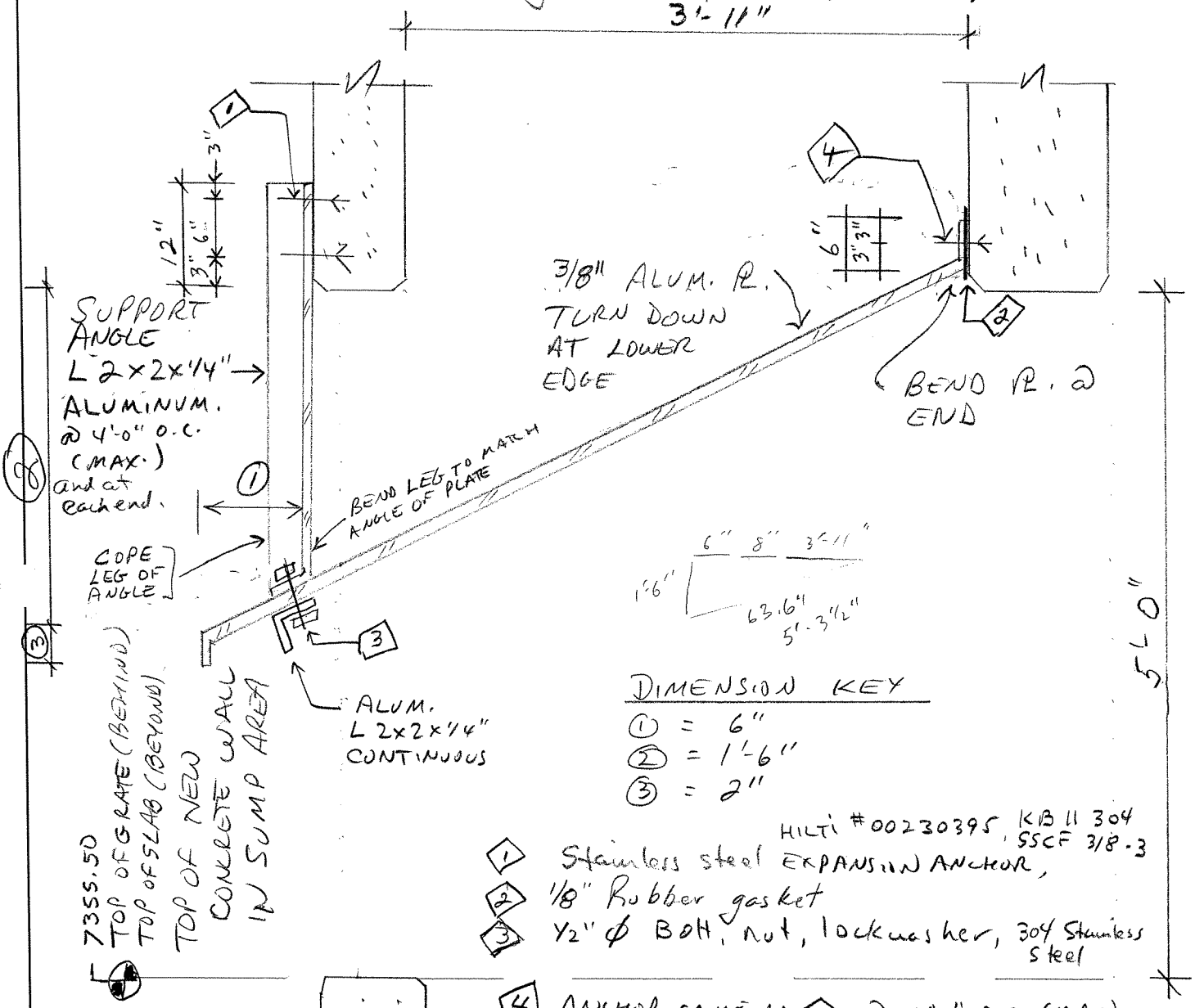

DIMENSION KEY

① = 6"
② = 1'-6"
③ = 2"

HILTI #00230395, KB II 304 SSCF 3/8-3

1. Stainless steel EXPANSION ANCHOR,
2. 1/8" Rubber gasket
3. 1/2" ϕ BOLT, nut, lockwasher, 304 Stainless Steel
4. ANCHOR, SAME AS 1, @ 18" O.C. (MAX).

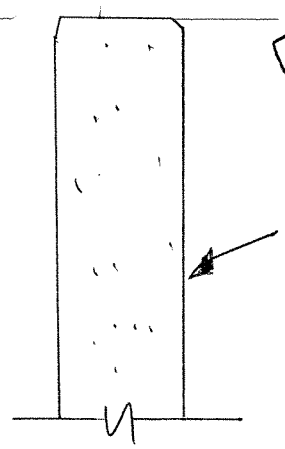

NEW CONCRETE DIVIDER WALL IN SLOPED SUMP AREA

B-B SECTION AT NEW DIVERTER PL.

N.T.S.

HNR TEAM

DESIGN CALCULATION SHEET

Calc. #: 3442.083-SCAL-001
Rev: A
Page: 4 of 21

Design Calculation Title: LDCC Tower Structural Modifications	Orig: DAA	Date: 5/31/02
Project No. & Title: 100256 LDCC Cooling Tower Improvements	Checker: RAP	Date: 6.20.02

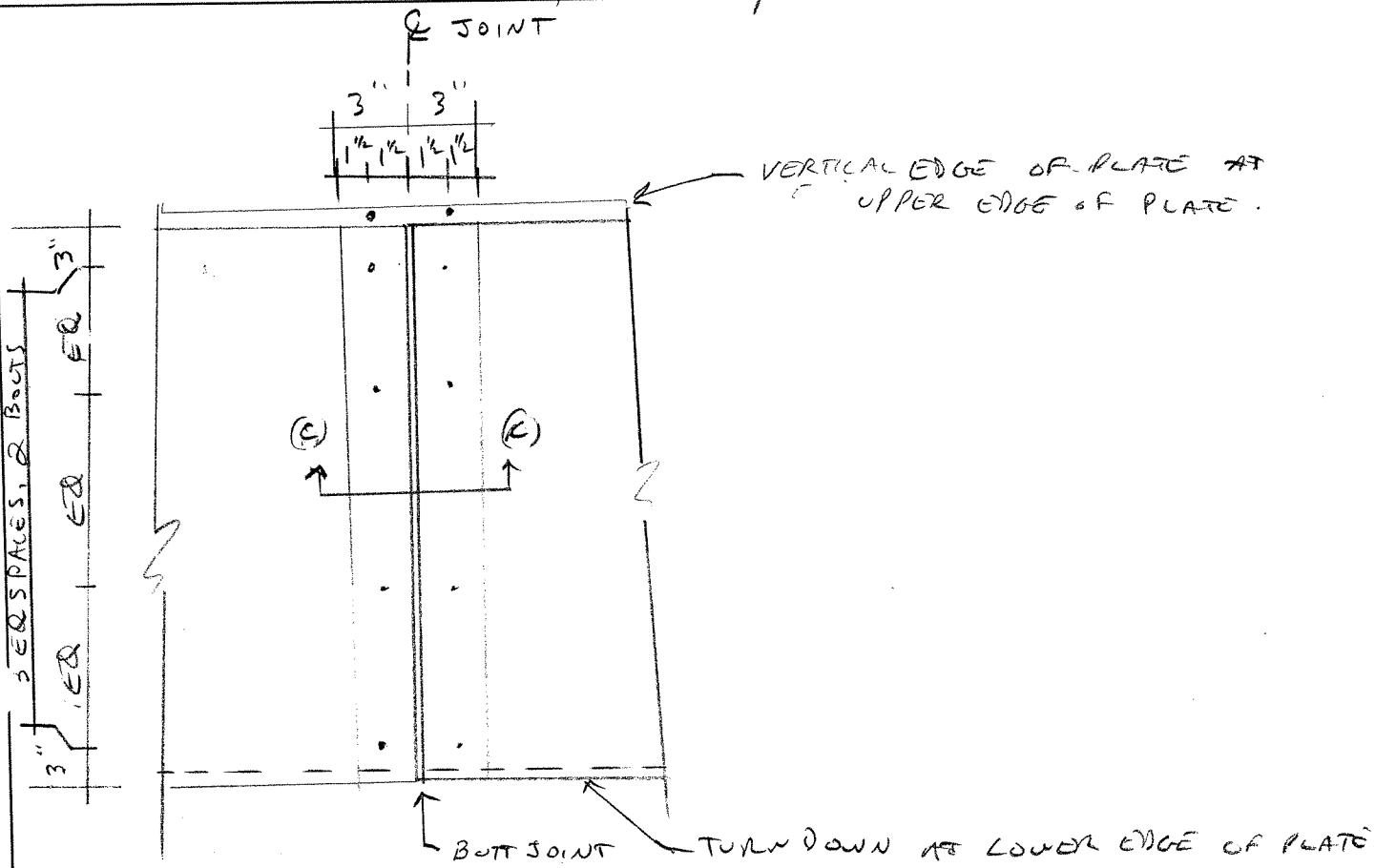

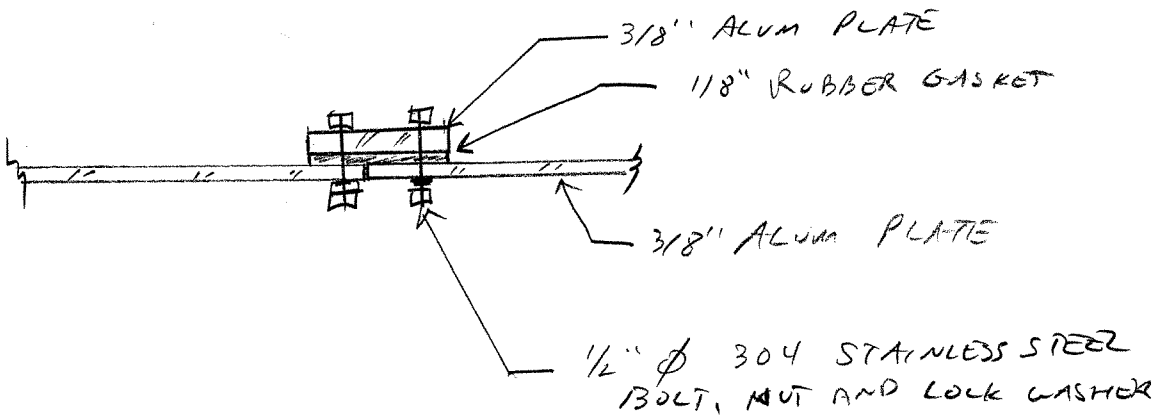

SECTION C-C

DIVERTER PLATE JOINT DETAIL

Diverter Plates:

1) Each tower has 2100 gpm capacity.
Each tower has 5 "bays".
∴ Each bay has 2100 gpm/5 = 420 gpm capacity.

2) The water flows (gravity) down through a staggered column of "fill" material, "trickle" fall thru fill media.
Assume the water velocity thru media is "slow" ⇒ neglect it.

3) The water is in "free-fall" from the bottom of the fill media = Top of "Fill Beams", as shown on the existing cooling tower plans.

4) The fill beam depth = 1'-9"
The diverter plate slopes down from one fill beam to the next beam, and is 1'-6" below the bottom of the fill beam at that point.

5) ∴ Max freefall height of water = 1'-9 + 1'-6" = 3'-3"
Min freefall height of water = 1'-9".

Diverter Plates (cont.)

6) Each bay has a inside (clear) area = 3'-10" x 22'-6"

Bay area = 86.25 ft^2

420 gpm / 86.25 ft^2 = 4.87 gpm per ft^2

7) Convert 4.87 gpm/ft^2 to a load (uniform):

from Physics:

$$v^2 = v_0^2 - 2g(y - y_0)$$

v = final velocity
v_0 = initial velocity
g = -32.2 ft/sec^2
y = final vertical position
y_0 = initial vertical position

where: $v_0 = 0$ ft/sec
$g = 32.2$ ft/sec^2
USE MAX HT, conservative OK. → $y = -3.25$ ft.
$y_0 = 0.0$ ft.

$$v^2 = ((0)\text{ft/sec})^2 - (2)(32.2\text{ ft/sec}^2)[-3.25\text{ ft} - 0\text{ ft}]$$
$$v^2 = 209.3\text{ ft}^2/\text{sec}^2$$
$$v = 14.47\text{ ft/sec}$$

From AASHTO (14th ED 1989) 3.18.1 (attached, see Appendix)

the effect of flowing water on piers ⇒

EQ (3-4) $P = KV^2$ where
P = pressure in psf
V = velocity of water in ft/sec
K = 1 3/8 for square ends
1/2 for angle ends, ∡ less than 30°
2/3 for circular piers.

Assume diverter plate is ≈ square end pier ⇒

$P = (1\ 3/8)(14.47\text{ ft/sec})$
$P = 19.9$ psf ⇒ USE $P_{wtr} = 20$ psf for diverter plate design.

HNR TEAM
DESIGN CALCULATION SHEET

Calc. #: 3442.083-SCAL-001
Rev: A
Page: 24 of 24

Design Calculation Title: LDCC Tower Structural Modifications	Orig: DAA	Date: 5/30/02
Project No. & Title: 100256 LDCC Cooling Tower Improvements	Checker: [illegible]	Date: 6.20.02

Diverter Plate (cont.)

8) Assume plate is continuously supported at upper end by anchors into fill beam and by vertical hangers spaced at 4'-0" o.c. along the lower end.

Size plate for 20 psf, L = 4.83 FT, simple span.

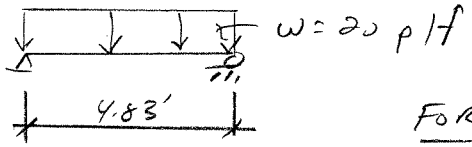

FOR A 1 FT STRIP:

$M = \frac{wl^2}{8} = (20psf)(4.83ft)^2/8$

$M = 58.14$ lb-ft $= 0.058$ k-ft.

$V_{per\,ft} = wl/2 = (20psf)(4.83ft)/2$

$V_{per\,ft} = 48.3$ lbs/ft.

$\Delta = 5wl^4/384EI$
$= \frac{(5)(20plf)(4.83ft)^4}{384EI}$

Shear per hanger $= V_{4ft} = 4(48.3)$ lbs

$V_{4ft} = V_{hanger} = 193.2$ lbs.

9) Select Aluminum for diverter plate and angle for hanger and brace at lower edge of plate.

NOTE: Aluminum is used for existing diverter plates over catwalk.

Alloy 6063: : Misc applications - scaffolding, towers, ladders
USE THIS → 6061, 5456: Industrial " - tanks, pressure vessels.

Properties: ω = 170 pcf
E = 10000 KSI (T or C)

6061 -T6 most std structural shapes available, weldable ✓
5456 weldable -

for 9) Ref: Structural Eng. Handbook, 3rd Edition
Gaylord Jr, Gaylord (pages attached, see Appendix)

Diverter Plate (cont.)

10) Design for bending: 6061-T6 Alum. from 9) Ref: Tbl. 3 p. 11-3
$F_y = 35$ KSI
T or C.

For water load $\Rightarrow M = 0.058$ K-FT (Step 8)
For 1/4" plate: $170 \frac{lbs}{ft^3} (1^{FT} \times 1^{FT} \times \frac{1/4}{12} ft) = 3.5$ psf @ $t = 1/4"$

$M_{self} = (3.5 \text{ plf})(4.83 \text{ ft})^2/8$
$M_{self} = 10.2$ lb-ft $= 0.010$ K-ft.

$M_{TOTAL} = M_{water} + M_{self} = (0.058 + 0.010)$ K-FT
$M_{TOTAL} = 0.068 \text{ K-FT} \times 12 \frac{in}{ft} = \underline{0.82 \text{ K-in}}$

$\frac{I}{c} = S$ for 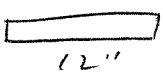 1/4" $= \frac{bh^3/12}{1/8} = (12)(1/4)^3/12 = 0.125 \text{ in}^3$

$f_b = \frac{M}{S} = \frac{0.82 \text{ K-in}}{0.125 \text{ in}^3} = 6.56$ KSI ← USE THIS OK $t = 1/4"$

Try 3/8" plate:
$w = (3/8)/12 \, (170 \text{ pcf}) = 5.32$ plf.

$M_{self} = 5.32 \text{ plf} \, (4.83 \text{ ft})^2/8 = 15.5$ lb-ft $= 0.015$ K-ft
$M_{TOTAL} = (0.015 + 0.058)$ K-ft $= 0.073$ K-ft $= 0.876$ K-in.

$S_{3/8} = \frac{(1/12)(12)(3/8)^3}{3/16} = 0.281 \text{ in}^3$

$f_b = M/S = (0.876 \text{ K-in})/0.281 \text{ in}^3$

$f_b = 3.11$ KSI

SAY $F_b = 0.6 F_y = 0.6(35 \text{ KSI}) = 21$ KSI

$(f_b = 6.56 \text{ KSI}) < (F_b = 21 \text{ KSI}) \Rightarrow$ OK for bending
$t = 1/4"$
$L = 4.83$ FT.

(Step 10)
$w = 3.5$ plf
$I = bh^3/12$
$= 12''(1/4)^3/12$
$= 0.015625\ in^4$
$E = 10000$ ksi
(Step. 9)

11) Check plate deflection: for $t = 1/4''$ plate

$$\Delta = \frac{(5)[(20 + 3.5)\ plf](4.83\ ft)^4}{384(10000\ ksi)(0.015625\ in^4)}$$

$$= \frac{5\left(23.5\ \frac{lbs}{ft} \times \frac{1\ ft}{12\ in} \times \frac{1\ K}{1000\ lbs}\right)\left[4.83\ ft \times \frac{12\ in}{ft}\right]^4}{(384)(10000\ ksi)(0.015625\ in^4)}$$

$= 1.84$ inch $\Rightarrow$ N.G.

Check deflection for $t = 3/8''$

$I = (12)(3/8)^3/12 = 0.05273$
$w = 5.32$ plf

$$\Delta = (1.84)\left(\frac{25.32}{23.5}\right)\left(\frac{.015625}{.05273}\right)$$

Ratio weight, I.

$\Delta = 0.59''$ ok.

This is for beam bending - plate is stiffer $\Rightarrow$ ok.

$$\Delta_{\text{reduced to avg load}} = 0.59\left(\frac{14+5.32}{20+5.32}\right)$$

This is assuming max ht. of water for entire plate - Avg ht = 2.5' 3.25 ft. used
P for avg = 14 psf
14/20 = 0.71 load reduced.

$\Delta = 0.45'' \Rightarrow$ ok.

$\therefore$ use $t = 3/8$ for deflection $< 1/2'' \Rightarrow$ ok.

$\therefore$ use $t = 3/8''$

Bending ok (Step 10)
Deflection ok. (Step 11)

HNR TEAM DESIGN CALCULATION SHEET	Calc. #: 3442.083.SCAL.001 Rev: A Page: [illegible] of [illegible] 27

Design Calculation Title: LDCC Tower Structural Modifications	Orig: DAA	Date: 5/30/02
Project No. & Title: 100256 LDCC Cooling Tower Improvements	Checker: [illegible]	Date: 6.20.02

Diverter Plate (cont.)

12) Design hanger for tension. ASD 9th p. 1-50

USE L 2x2 x 1/4 $A = 0.938 in^2$ $I = 0.348 in^4$
$S = 0.247 in^3$

$V_{hanger\ 4' spacing} = 193\ lbs + V_{self\ wt.\ plate}$
↑ water ↖ Step 8

3/8" plate wt = 5.32 psf
Wt plate for 4.83' x 4' = (4.83 FT)(4 FT)(5.32 psf)
$W_{PL} = 103$ lbs.

$V_{hanger\ Total} = (193 + 103)\ lbs$
↑ wtr ↖ self

$V_{hanger\ Total} = 296$ lbs, ⇒ SAY 300 lbs per hanger

$f_t = V/A = 0.3K / 0.938 in^2$

$f_t = 0.32$ KSI ⇒ BY INSPECTION OK for hanger tension.